KOFORD
KF Create Better Life

KOFORD DEVELOPMENT CO.,LIMITED
深圳市科弗特实业有限公司

www.kf-ind.com

2020-2021 Edition

Pro-A/V Mounts and Stands

SERVICE COMMERCIAL-CUSTOMER SERVICE
2/F,Bldg. B,Rongtiansheng Industrial Park,No.135 Fuyuan 1st Rd.,Fuhai Str.,Bao'an 518103 Shenzhen,China
Tel:86-755-3669 8077 Fax:86-755-3669 8177 Email:sales@kf-ind.com Website:www.kf-ind.com

KOFORD
KF Create Better Life

KOFORD DEVELOPMENT CO.,LIMITED
深圳市科弗特实业有限公司

Some of the products shown in this catalogue may be available at the time of order,please contact us for any specific requests information on products and their characteristics may be updated to take into account ongoing production improvements.

COMPANY PROFILE

Koford, a Chinese company & factory,has been specialized in LCD / Plasma Mount / stand & Computer accessories Supplies.

Concentrating on offering products with unique design and high quality to fulfill the most update market trend.

Koford aims at developing new products in wide range evenly each year trying to offter a complete solution to meet the needs of wordwide customers.

Besides,koford is strong in doing OEM & ODM businesses,Feel free to contact our sales team at sales@kf-ind.com to get more information about our products or any query you may have.

CONTENTS

Mounts & Stands for Flat TV Screens

TV Wall Mount	01-06
TV Wall Mount Heavy Duty-Portrait & Landscape	07-11
Push Video Wall Mount	12-14
Menuboard Video Wall Mount	15-20
Ceiling Mount	21-26
Video Conference Mount & Stand	27-35
Alu.Pillar TV Floor Stand	36-78
Metal Pillar TV Floor Stand	79-84
Motorized TV Floor Srand	85-92
Video Wall Stand	93-112
Optional Parts	113-118

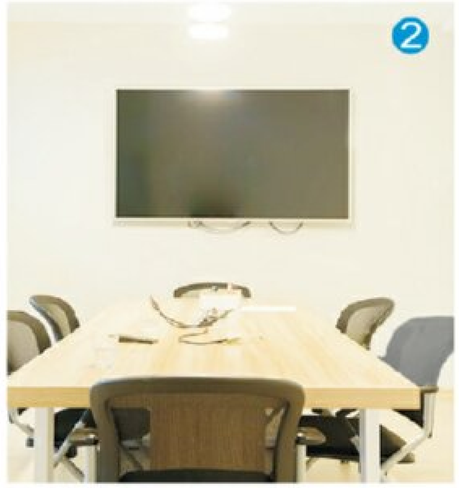

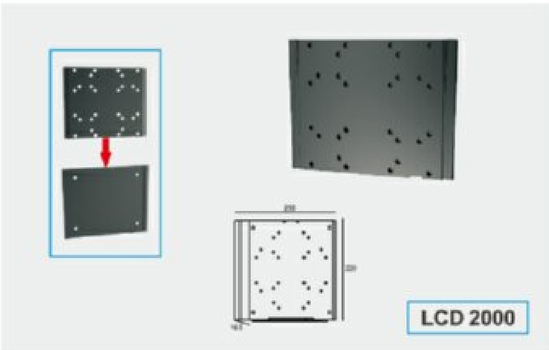

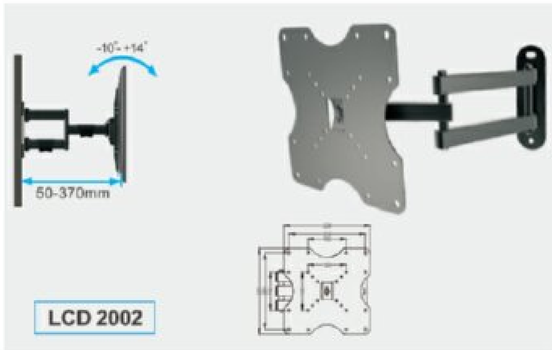

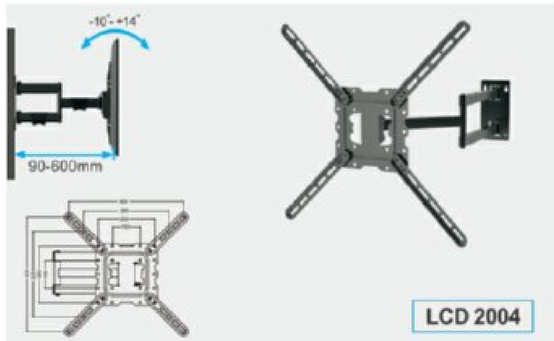

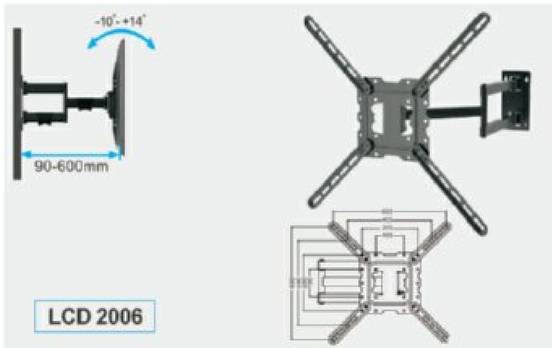

Model	Color	Material	Suggest Size	Loading Capacity	VESA Standard	Tilt	Profile
LCD 2000	Black or Silver	SPCC	14-32"	25kgs	Max.200*200	0°	16.5mm
LCD 2002	Black or Silver	SPCC	14-32"	25kgs	Max.200*200	-10°- +14°	52mm
LCD 2004	Black or Silver	SPCC	32-55"	35kgs	Max.400*400	-10°- +14°	90mm
LCD 2006	Black or Silver	SPCC	37-70"	45kgs	Max.600*400	-10°- +14°	90mm

Product Details:

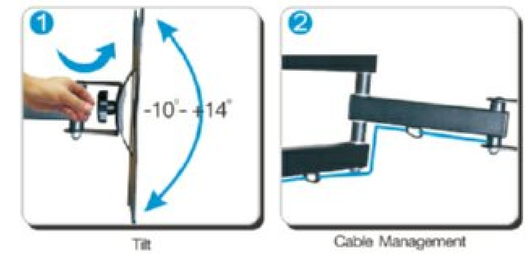

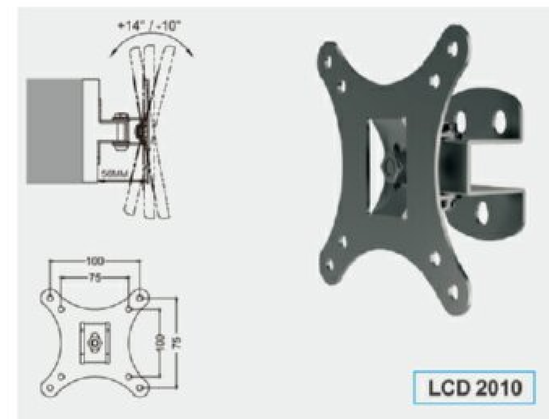

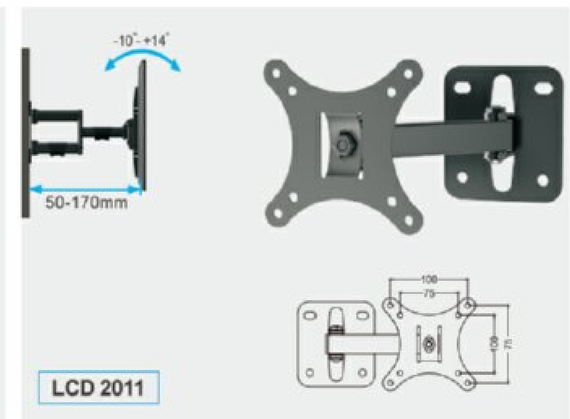

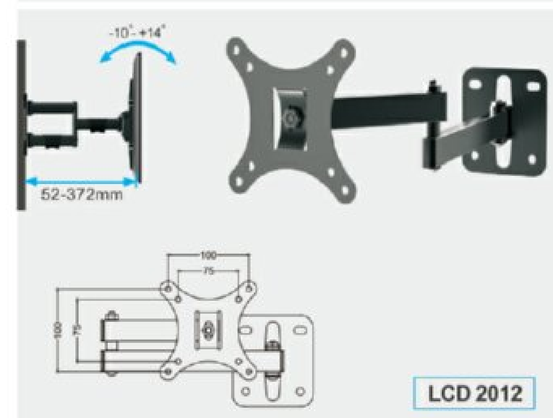

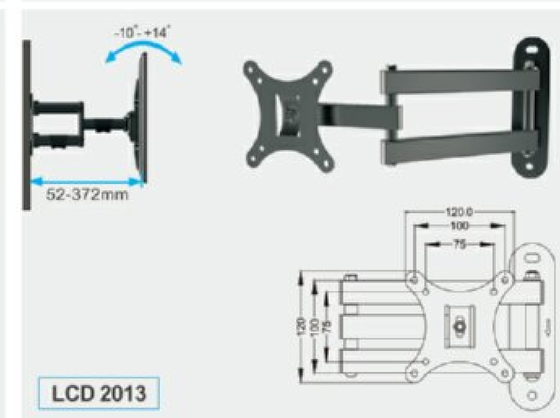

Model	Color	Material	Suggest Size	Loading Capacity	VESA Standard	Tilt	Profile
LCD 2010	Black or Silver	SPCC	14-32"	15kgs	Max.100*100	-10°- +14°	56mm
LCD 2011	Black or Silver	SPCC	10-24"	15kgs	Max.100*100	-10°- +14°	50mm
LCD 2012	Black or Silver	SPCC	14-24"	15kgs	Max.100*100	-10°- +14°	50mm
LCD 2013	Black or Silver	SPCC	10-24"	15kgs	Max.100*100	-10°- +14°	52mm

TV Wall Mount

KOFORD DEVELOPMENT CO. , LIMITED
www.kf-ind.com

Product Details:

Bubble Level

Wire Locking System With Magnet

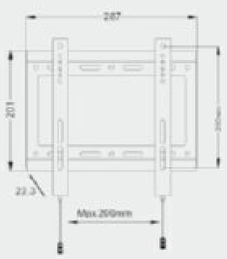

PL 5020S

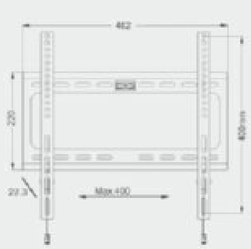

PL 5020M

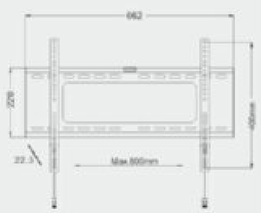

PL 5020L

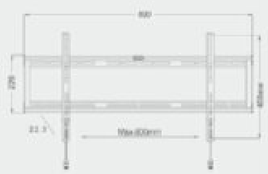

PL 5020XL

Model	Color	Material	Suggest Size	Loading Capacity	VESA Standard	Tilt	Profile
PL 5020S	Black or Silver	SPCC	14-32"	25kgs	Max.200*200	0°	22.3mm
PL 5020M	Black or Silver	SPCC	32-55"	35kgs	Max.400*400	0°	22.3mm
PL 5020L	Black or Silver	SPCC	37-70"	45kgs	Max.600*400	0°	22.3mm
PL 5020XL	Black or Silver	SPCC	42-70"	60kgs	Max.800*400	0°	22.3mm

TV Wall Mount

ISPACE
Better Choice of View

Product Details:

Bubble Level

Wire Locking System With Magnet

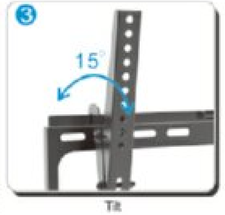

Tilt

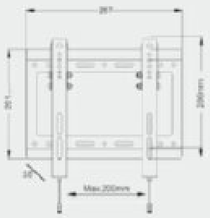

PL 5030S

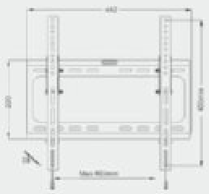

PL 5030M

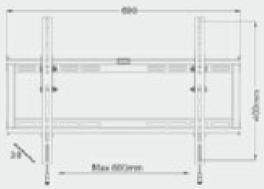

PL 5030L

PL 5030XL

Model	Color	Material	Suggest Size	Loading Capacity	VESA Standard	Tilt	Profile
PL 5030S	Black or Silver	SPCC	14-32"	25kgs	Max.200*200	-10°- +14°	38mm
PL 5030M	Black or Silver	SPCC	32-55"	35kgs	Max.400*400	-10°- +14°	38mm
PL 5030L	Black or Silver	SPCC	37-70"	45kgs	Max.600*400	-10°- +14°	38mm
PL 5030XL	Black or Silver	SPCC	42-70"	60kgs	Max.800*400	-10°- +14°	38mm

Product Details:

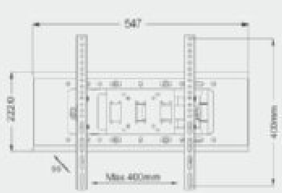

PL 5040M

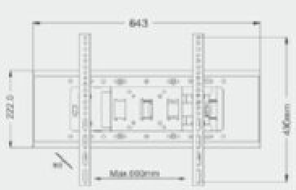

PL 5040L

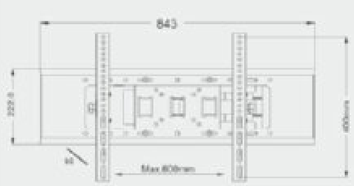

PL 5040XL

Model	Color	Material	Suggest Size	Loading Capacity	VESA Standard	Tilt	Profile
PL 5040M	Black or Silver	SPCC	32-55"	35kgs	Max.400*400	-12°- +5°	99mm
PL 5040L	Black or Silver	SPCC	37-70"	45kgs	Max.600*400	-12°- +5°	99mm
PL 5040XL	Black or Silver	SPCC	42-70"	60kgs	Max.800*400	-12°- +5°	99mm

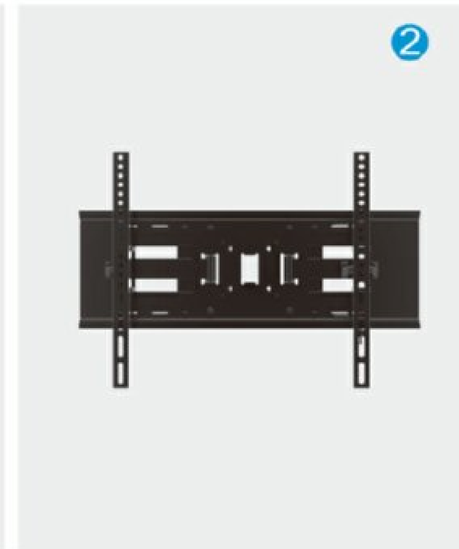

Product Details:

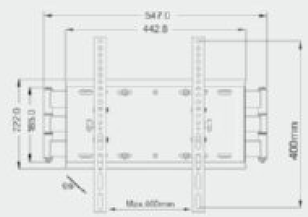

PL 5050M

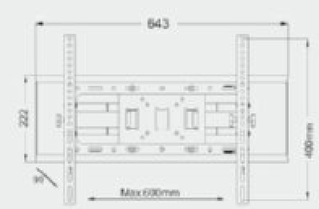

PL 5050L

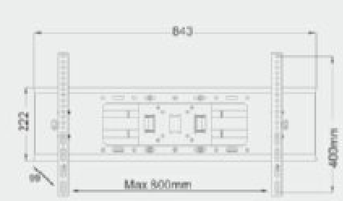

PL 5050XL

Model	Color	Material	Suggest Size	Loading Capacity	VESA Standard	Tilt	Profile
PL 5050M	Black or Silver	SPCC	32-55"	35kgs	Max.400*400	-12°- +5°	99mm
PL 5050L	Black or Silver	SPCC	37-70"	45kgs	Max.600*400	-12°- +5°	99mm
PL 5050XL	Black or Silver	SPCC	42-70"	60kgs	Max.800*400	-12°- +5°	99mm

Product Details:

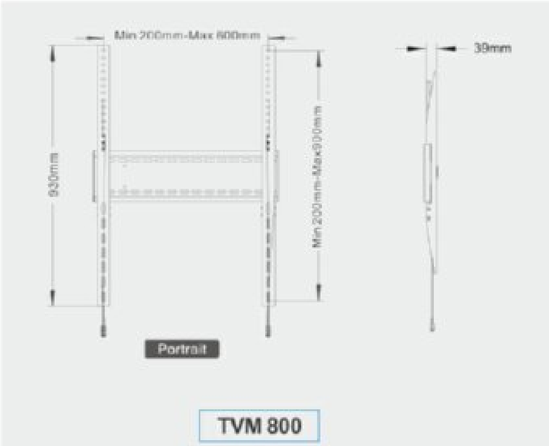

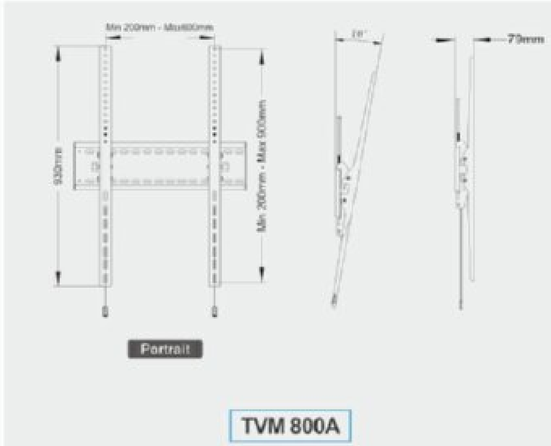

Model	Color	Material	Suggest Size	Loading Capacity	VESA Standard	Tilt	Orientation	Profile
TVM 800	Black or Silver	2.5mm SPCC	70-110"	125kgs	Max.600*900 Portrait	0°	Portrait	39 mm
TVM 800A	Black or Silver	2.5mm SPCC	70-110"	125kgs	Max.600*900 Portrait	10°	Portrait	79 mm

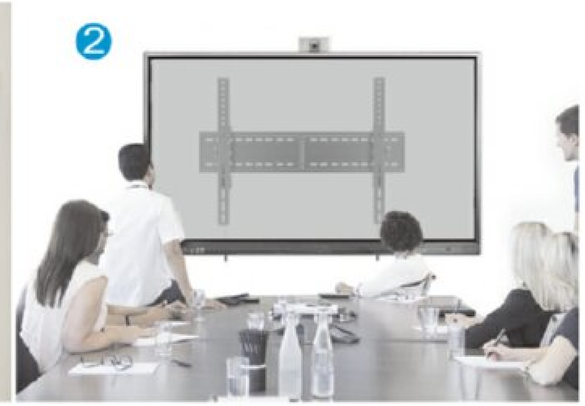

Product Details:

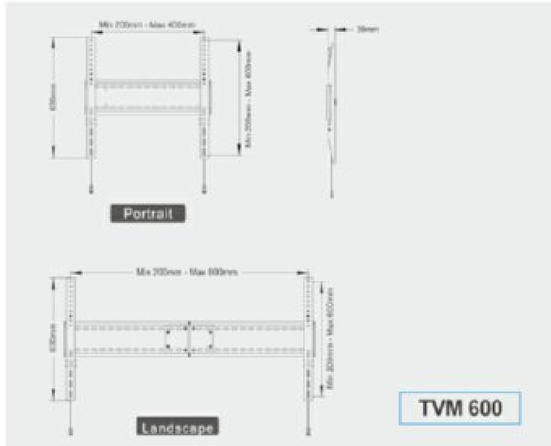

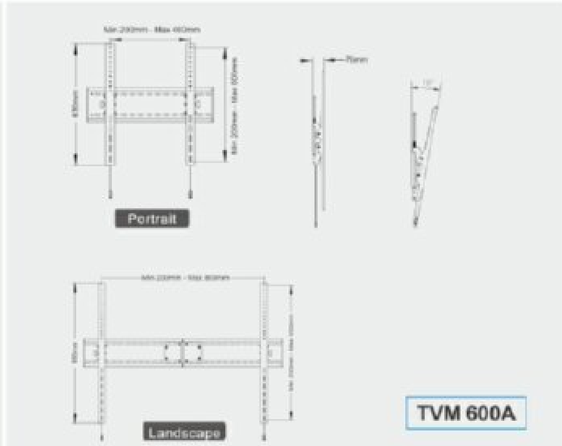

Model	Color	Material	Suggest Size	Loading Capacity	VESA Standard	Tilt	Orientation	Profile
TVM 600	Black or Silver	2.5mm SPCC	70-110"	125kgs	Max.800*600 Landscape Max.400*600 Portrait	0°	Landscape Portrait	39 mm
TVM 600A	Black or Silver	2.5mm SPCC	70-110"	125kgs	Max.800*600 Landscape Max.400*600 Portrait	10°	Landscape Portrait	79 mm

Wall hanging Be able to meet multiple scenario usage requirements

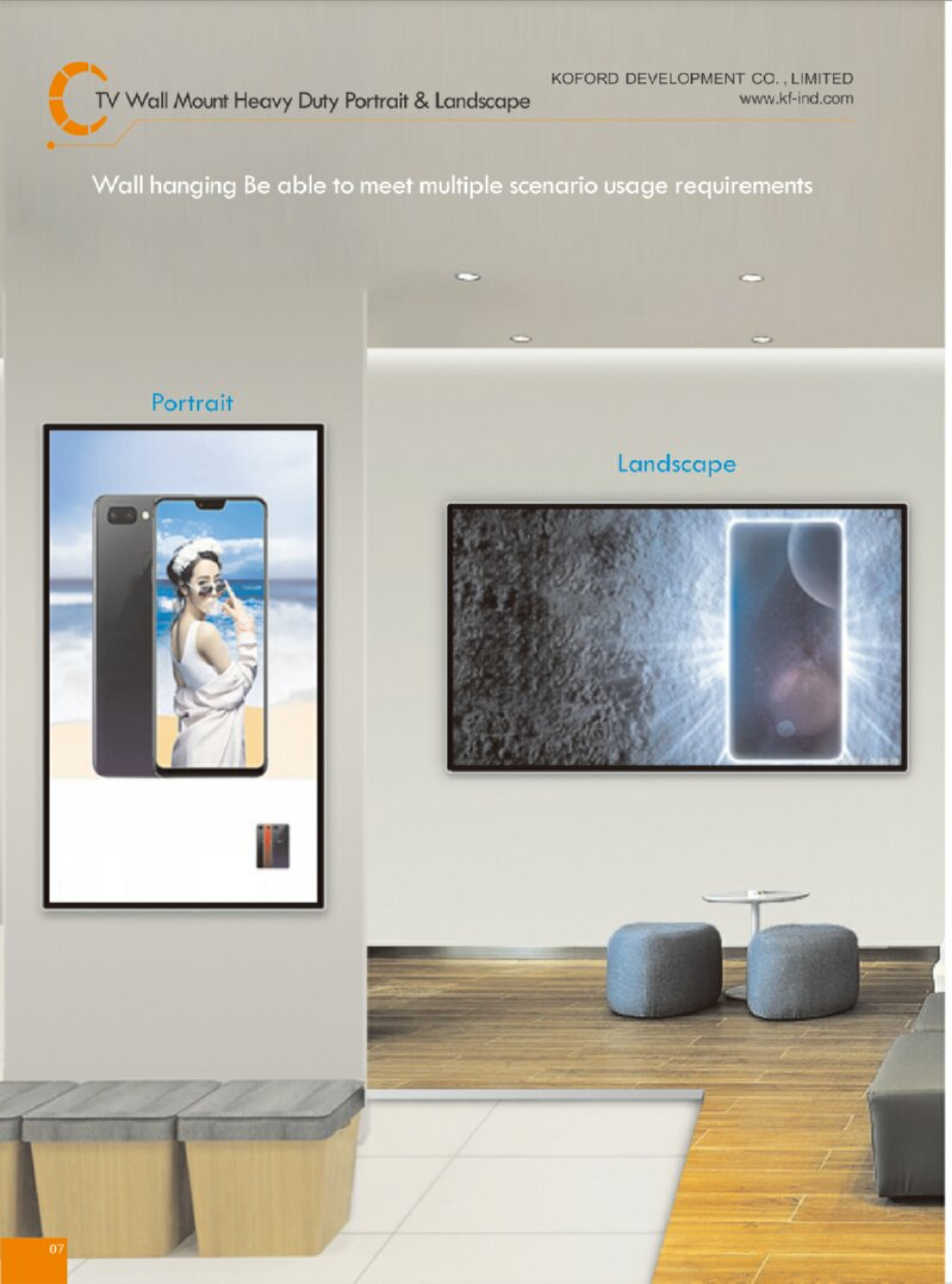

TVM 400

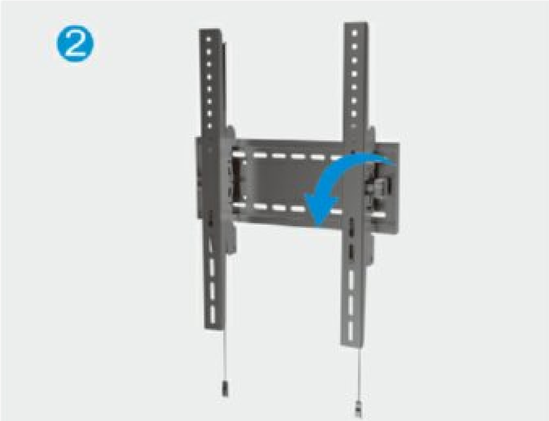

TVM 400A

Product Details:

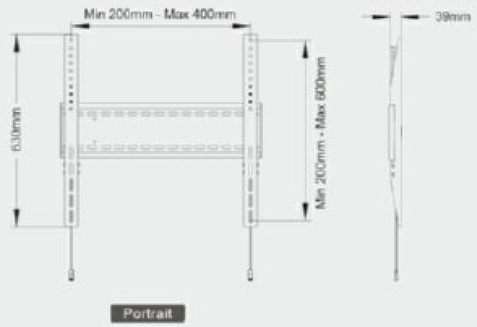

TVM 400

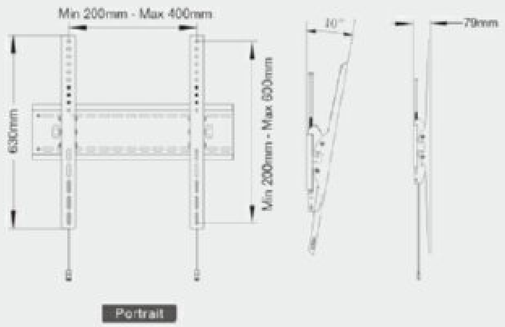

TVM 400A

Model	Color	Material	Suggest Size	Loading Capacity	VESA Standard	Tilt	Orientation	Profile
TVM 400	Black or Silver	2.5mm SPCC	30-60"	125kgs	Max.400*600 Portrait	0°	Portrait	39 mm
TVM 400A	Black or Silver	2.5mm SPCC	30-60"	125kgs	Max.400*600 Portrait	10°	Portrait	79 mm

TV Wall Mount Heavy Duty Portrait & Landscape

KOFORD DEVELOPMENT CO., LIMITED
www.kf-ind.com

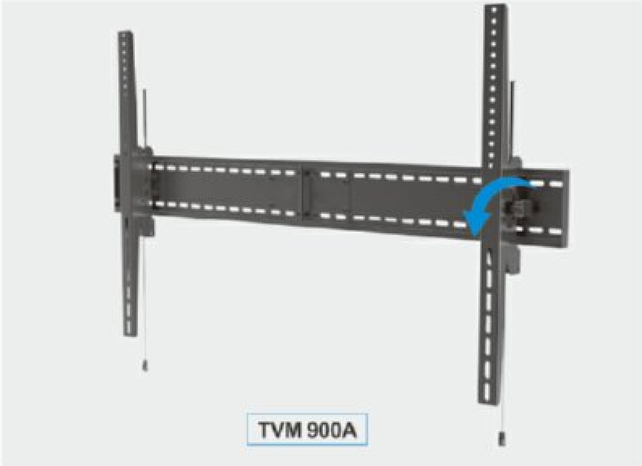

Product Details:

Fine Tune Adjustment for Screen Level

Wire Locking System With Magnet

Padlock optional

Easy Tilt

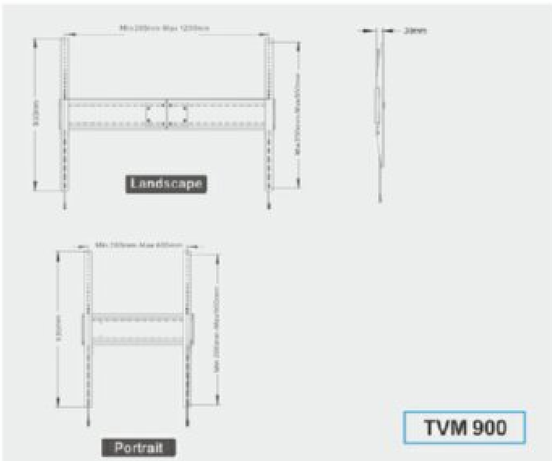

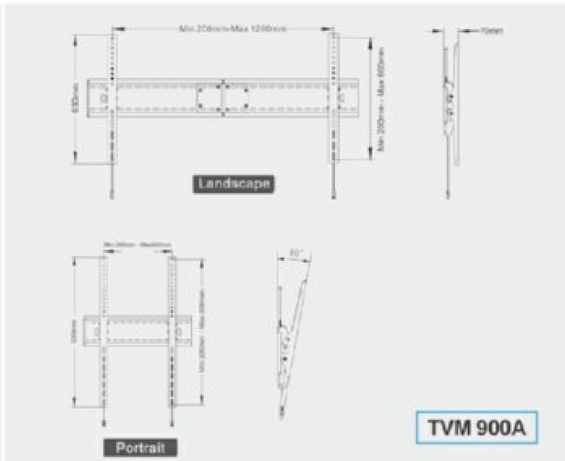

Model	Color	Material	Suggest Size	Loading Capacity	VESA Standard	Tilt	Orientation	Profile
TVM 900	Black or Silver	2.5mm SPCC	70-110"	125kgs	Max.1200*900 Landscape Max.600*900 Portrait	0°	Landscape Portrait	39 mm
TVM 900A	Black or Silver	2.5mm SPCC	70-110"	125kgs	Max.1200*900 Landscape Max.600*900 Portrait	10°	Landscape Portrait	79 mm

Push Video Wall Mount

ISPACE
Better Choice of View

Push Video Wall Mount

KOFORD DEVELOPMENT CO., LIMITED
www.kf-ind.com

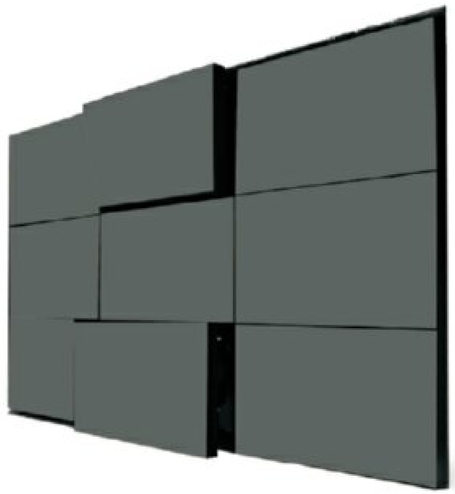

Product Details:

Lock & release screens from wall plat

Fine Tune

Locking System

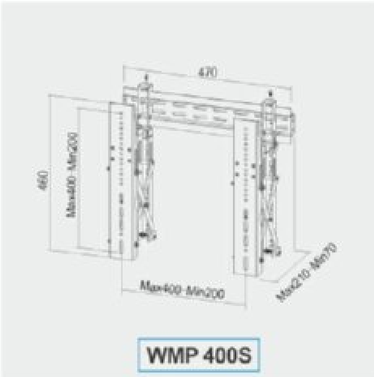

WMP 400S

WMP 600S

WMP 800S

Model	Color	Material	Suggest Size	Loading Capacity	VESA Standard	Tilt	Profile	Level Adjustment
WMP 400S	Black or Silver	SPCC	30-52"	70kgs	Max.400*400	-3° - +3°	68mm	-3° - +3°
WMP 600S	Black or Silver	SPCC	45-70"	70kgs	Max.600*400	-3° - +3°	68mm	-3° - +3°
WMP 800S	Black or Silver	SPCC	54-70"	70kgs	Max.800*400	-3° - +3°	68mm	-3° - +3°

Push Video Wall Mount

ISPACE
Better Choice of View

Product Details:

Lock & release screens from wall plat

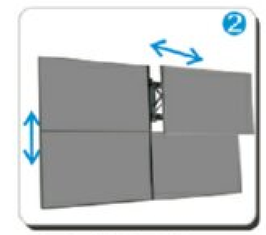

Fine Tune Adjustment of Screens
15mm Adjustment in Depth & Height

Depth Adjustment 15mm
Height Adjustment 15mm

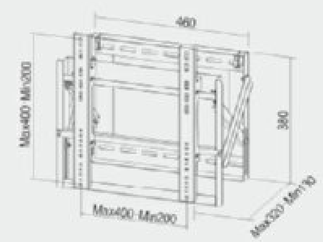

WMP 400

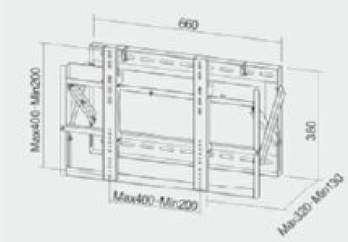

WMP 600

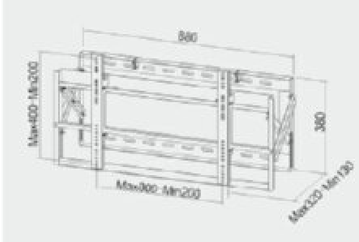

WMP 800

Model	Color	Material	Suggest Size	Loading Capacity	VESA Standard	Tilt	Profile	Level Adjustment
WMP 400	Black or Silver	SPCC	30-52"	70kgs	Max.400*400	-3° - +3°	148mm	-3° - +3°
WMP 600	Black or Silver	SPCC	45-70"	70kgs	Max.600*400	-3° - +3°	148mm	-3° - +3°
WMP 800	Black or Silver	SPCC	54-70"	70kgs	Max.800*400	-3° - +3°	148mm	-3° - +3°

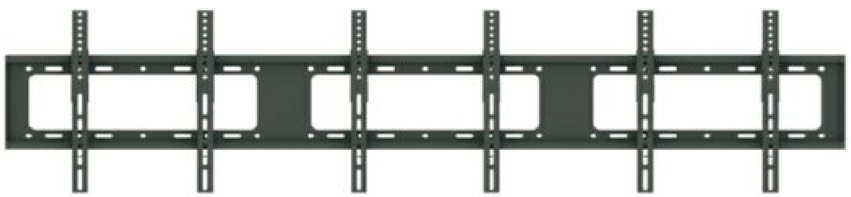

Product Details:

Tilt　　Multiple Screens Solution

Model	Color	Material	Suggest Size	Loading Capacity	VESA Standard	Tilt	Orientation
AWM 200S	Black or Silver	SPCC	26-42"	30kgs Per Screen	Max.600*400	10°	Landscape
AWM 300S	Black or Silver	SPCC	26-42"	30kgs Per Screen	Max.600*400	10°	Landscape

SPCC Rail 2-Screen 26-42" VESA Max 600*400 Landscape

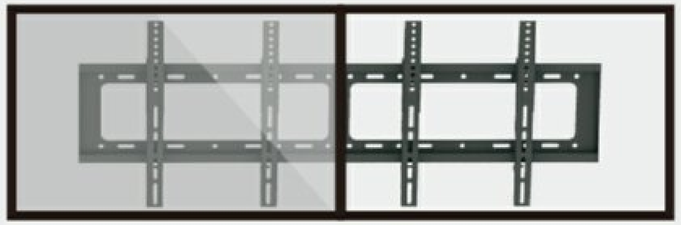

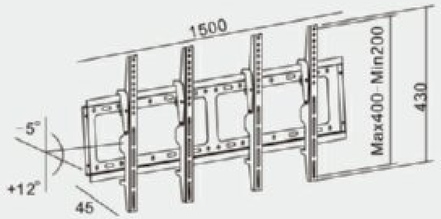

AWM 200S

SPCC Rail 3-Screen 26-42" VESA Max 600*400 Landscape

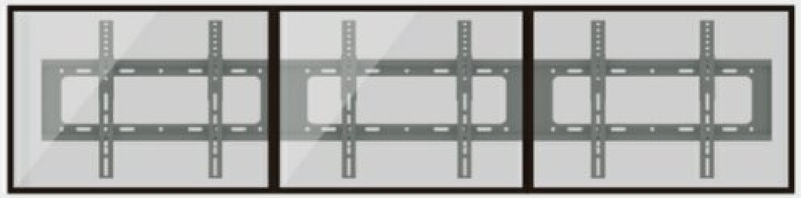

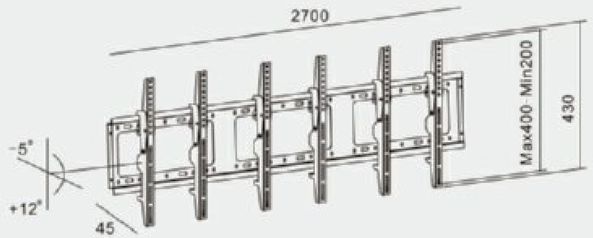

AWM 300S

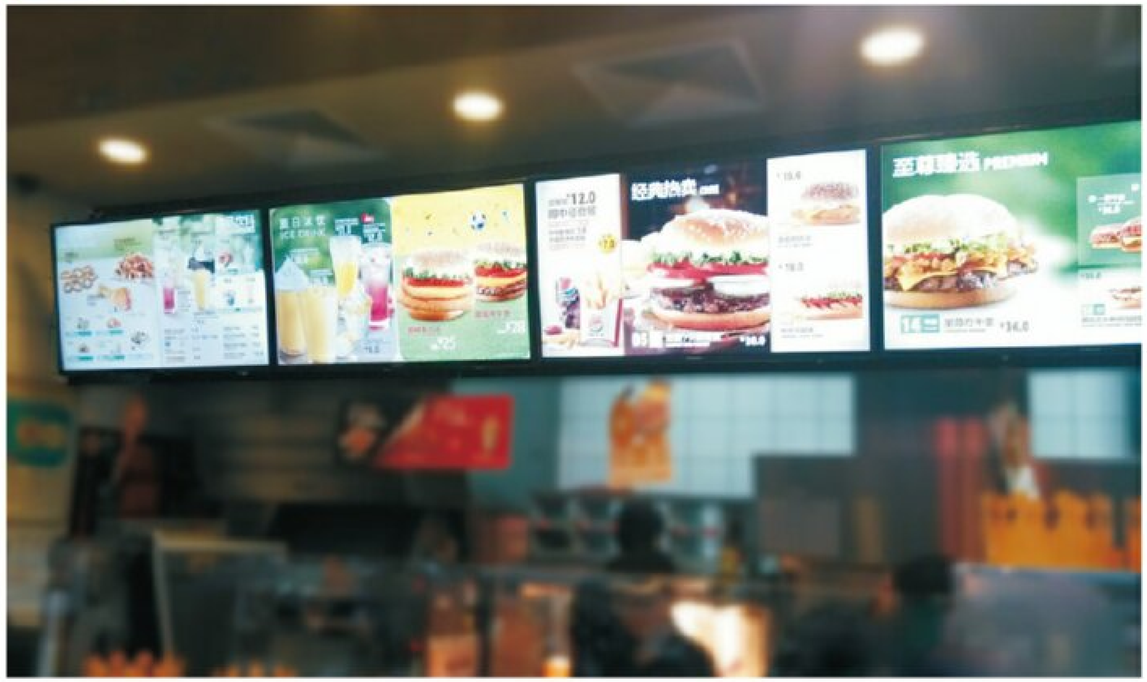

Product Details:

Multiple Screens Solution

Locking System

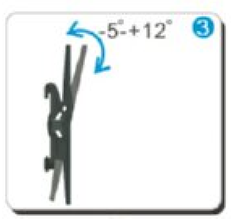

Tilt

Fine Tune Adjustment for Screen

Model	Color	Material	Suggest Size	Loading Capacity	VESA Standard	Tilt	Orientation
AWM 200	Black or Silver	SPCC	30-60"	40kgs Per mount	Max.800*400	10°	Landscape
AWM 300	Black or Silver	SPCC	30-60"	40kgs Per mount	Max.800*400	10°	Landscape

SPCC Rail 2-Screen 30-60" VESA Max 800*400 Landscape

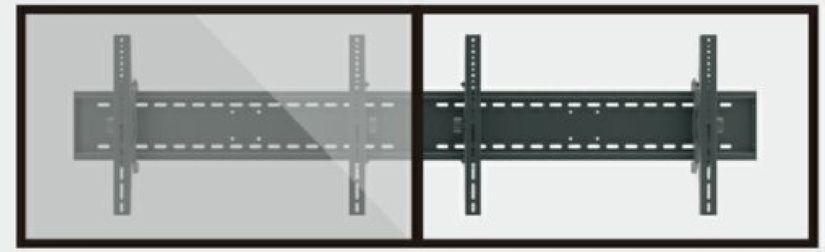

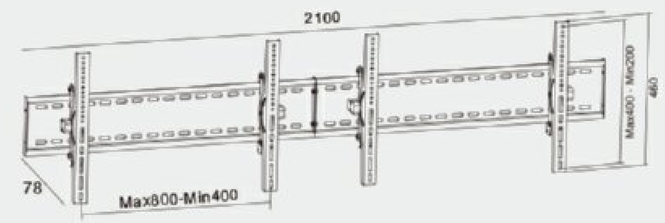

AWM 200

SPCC Rail 3-Screen 30-60" VESA Max 800*400 Landscape

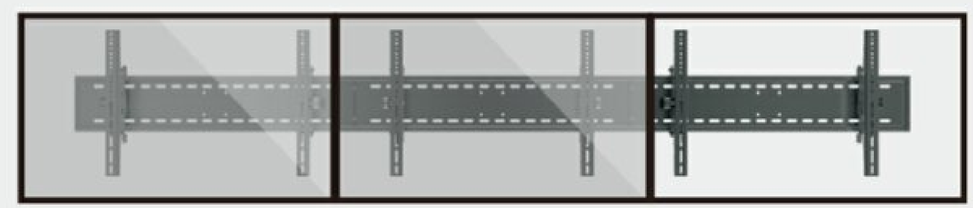

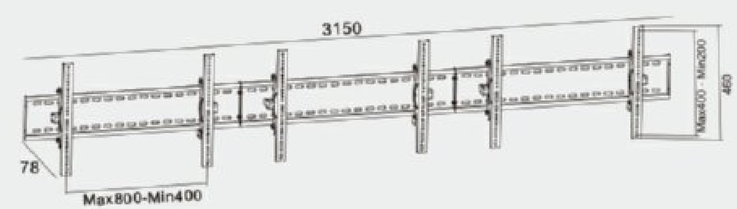

AWM 300

Menuboard Video Wall Mount

KOFORD DEVELOPMENT CO., LIMITED
www.kf-ind.com

Product Details:

Multiple Screens Solution

Wire Locking System With Magnet

Easy Tilt

Fine Tune Adjustment for Screen Level

SPCC Rail 2-Screen 37-70" VESA Max 400*600 Portrait

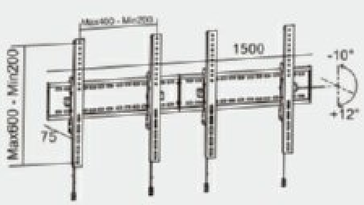

AWM 200PM

SPCC Rail 3-Screen 37-70" VESA Max 400*600 Portrait

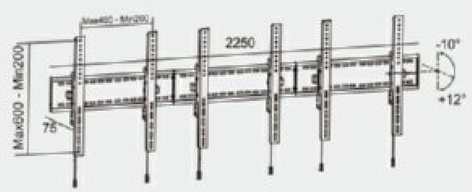

AWM 300PM

Model	Color	Suggest Size	Loading Capacity	VESA Standard	Tilt	Orientation	Profile	Material
AWM 200PM	Black or Silver	37-70"	125kgs Per Screen	Max.400*600 Portrait	10°	Portrait	75mm	2.5mm SPCC
AWM 300PM	Black or Silver	37-70"	125kgs Per Screen	Max.400*600 Portrait	10°	Portrait	75mm	2.5mm SPCC

Menuboard Video Wall Mount

ISPACE
Better Choice of View

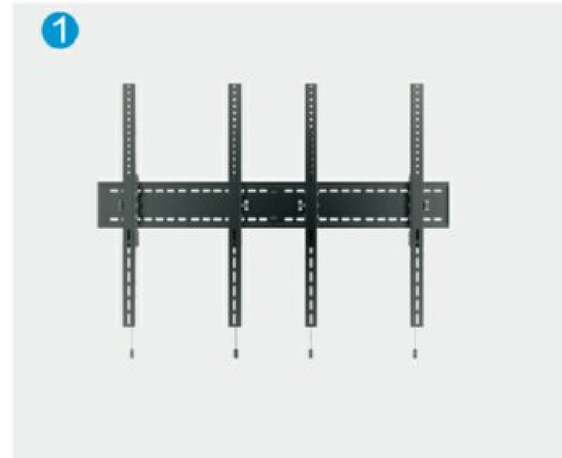

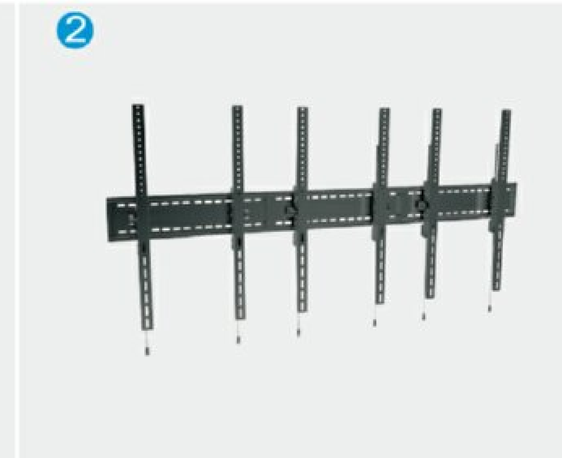

Product Details:

Multiple Screens Solution

Wire Locking System With Magnet

Easy Tilt

Fine Tune Adjustment for Screen Level

SPCC Rail 2-Screen 42-70" VESA Max 400*600 Portrait

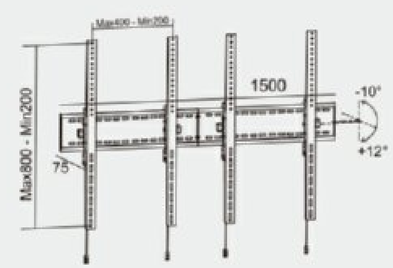

AWM 200PL

SPCC Rail 3-Screen 42-70" VESA Max 400*600 Portrait

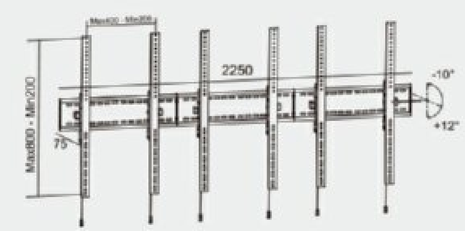

AWM 300PL

Model	Color	Suggest Size	Loading Capacity	VESA Standard	Tilt	Orientation	Profile	Material
AWM 200PL	Black or Silver	42-70"	125kgs Per Screen	Max.400*800 Portrait	10°	Portrait	75mm	2.5mm SPCC
AWM 300PL	Black or Silver	42-70"	125kgs Per Screen	Max.400*800 Portrait	10°	Portrait	75mm	2.5mm SPCC

Ceiling Mount

iSPACE
Better Choice of View

Product Details:

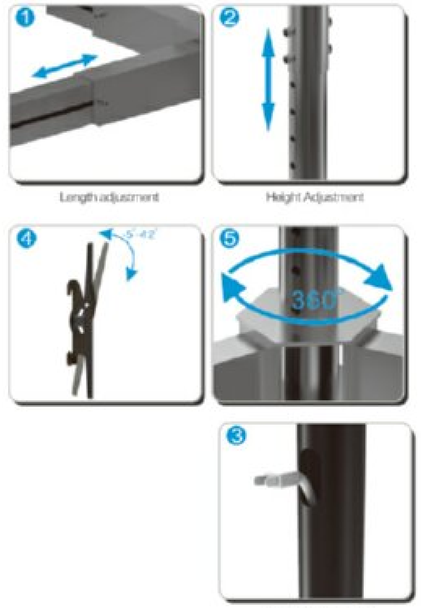

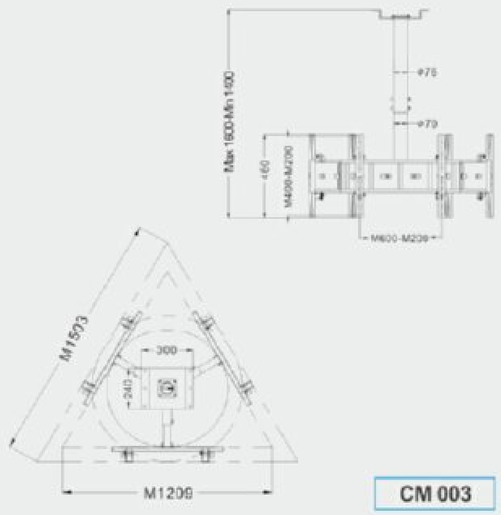

CM 003

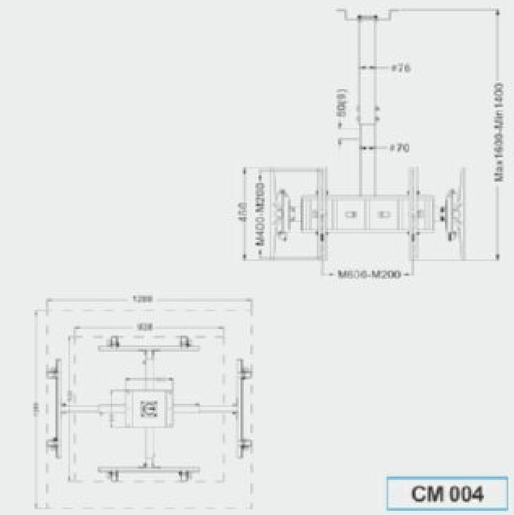

CM 004

Model	Color	Material	Suggest Size	Loading Capacity	VESA Standard	Tilt	Length
CM 003	Black or Silver	SPCC	30-60"	120kgs	Max.600*400	-5°- +12°	Min1400-Max1600
CM 004	Black or Silver	SPCC	30-60"	160kgs	Max.400*400	-5°- +12°	Min1400-Max1600

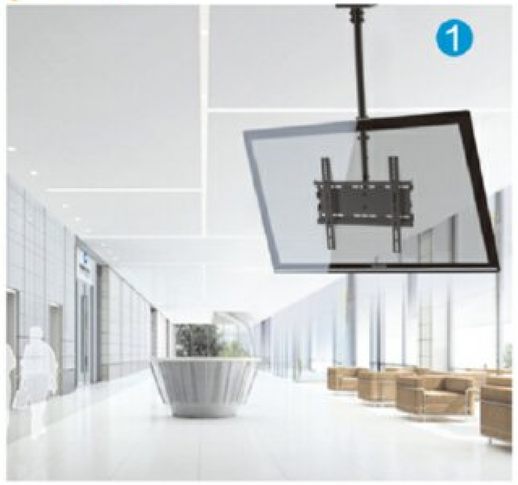

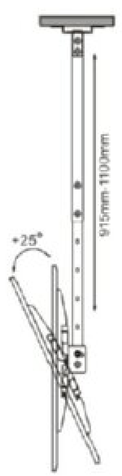

Product Details:

Model	Color	Material	Suggest Size	Loading Capacity	VESA Standard	Tilt	Length
PL 5060S	Black or Silver	SPCC	14-32"	25kgs	Max.200*200	+25°	Min915-Max 1100mm
PL 5060M	Black or Silver	SPCC	32-55"	35kgs	Max.400*400	+25°	Min915-Max 1100mm
PL 5060L	Black or Silver	SPCC	37-70"	45kgs	Max.600*400	+25°	Min915-Max 1100mm
PL 5060XL	Black or Silver	SPCC	42-70"	60kgs	Max.800*400	+25°	Min915-Max 1100mm

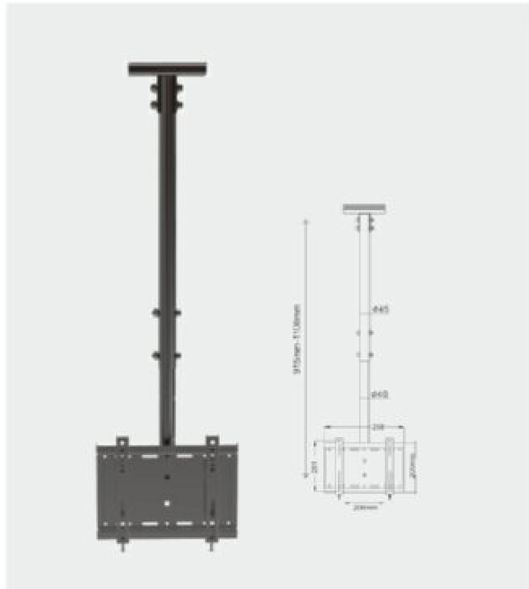

PL 5060S

PL 5060M

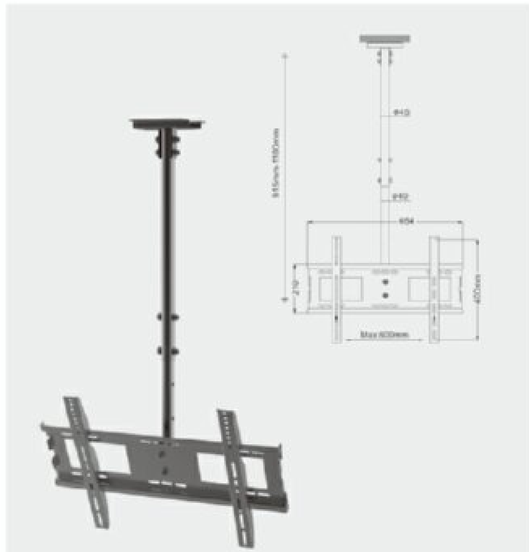

PL 5060L

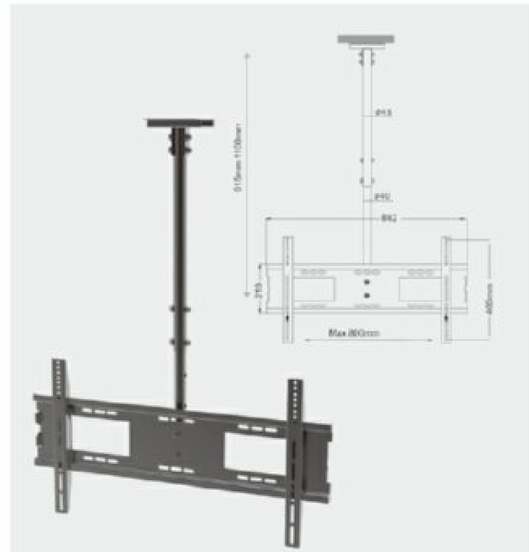

PL 5060XL

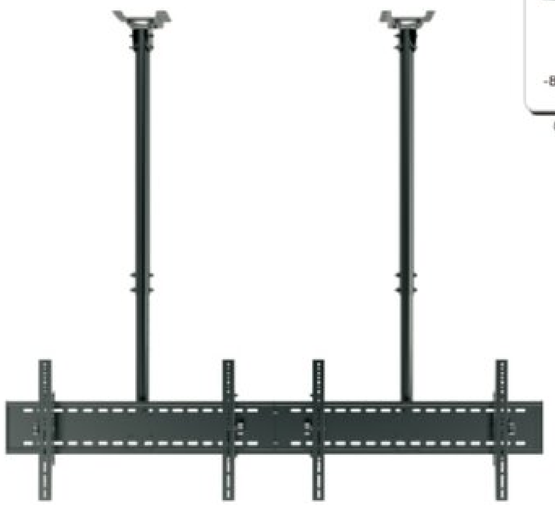

Product Details:

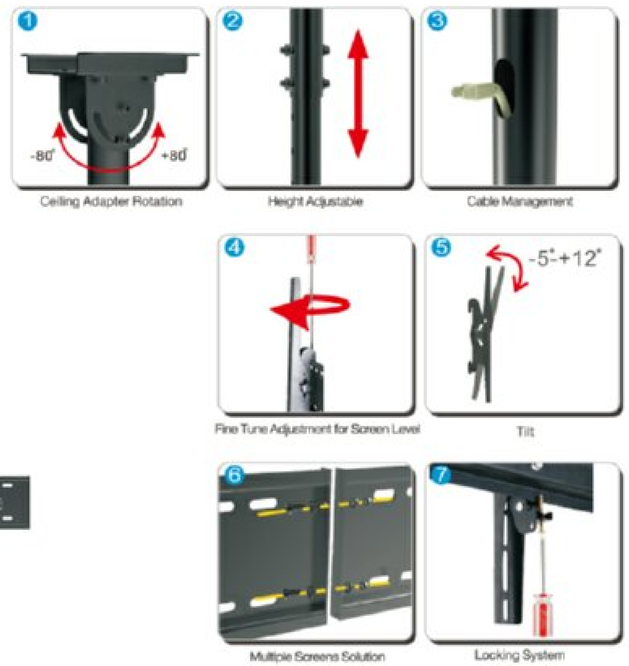

Model	Color	Material	Suggest Size	Loading Capacity	VESA Standard	Tilt	Length
CM 200C	Black or Silver	SPCC	30-60"	40kgs Per Screen	Max.800*400	-5°-+15°	Max1520-Min1220
CM 300C	Black or Silver	SPCC	30-60"	40kgs Per Screen	Max.800*400	-5°-+15°	Max1520-Min1220
CM 200CA	Black or Silver	SPCC	30-60"	40kgs Per Screen	Max.800*400	-5°-+15°	Max1520-Min1220
CM 300CA	Black or Silver	SPCC	30-60"	40kgs Per Screen	Max.800*400	-5°-+15°	Max1520-Min1220

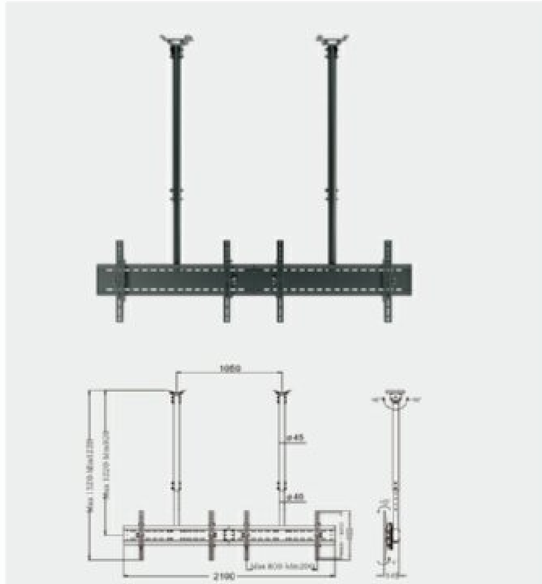

CM 200C

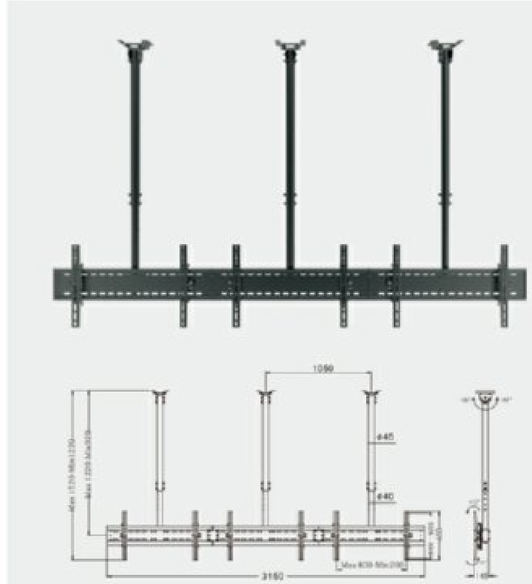

CM 300C

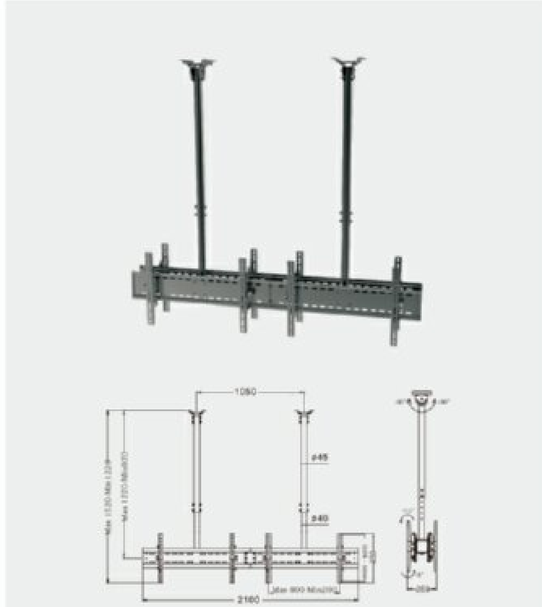

CM 200CA

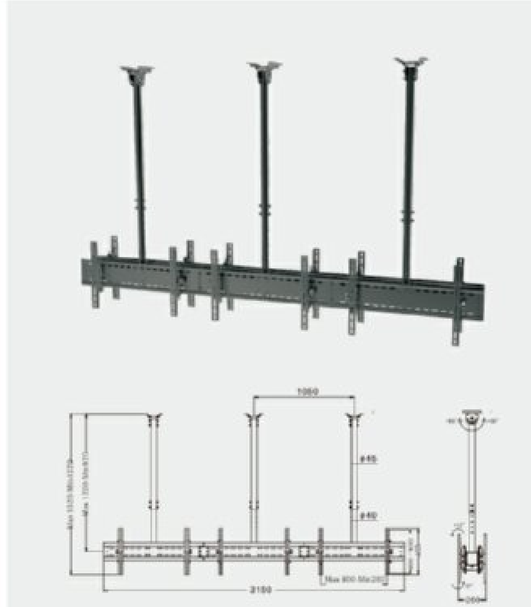

CM 300CA

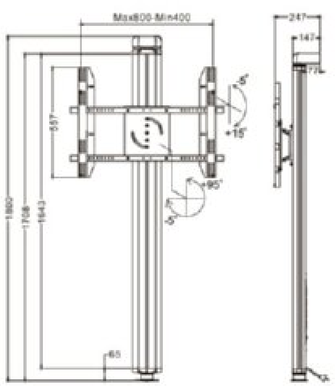

Product Details:

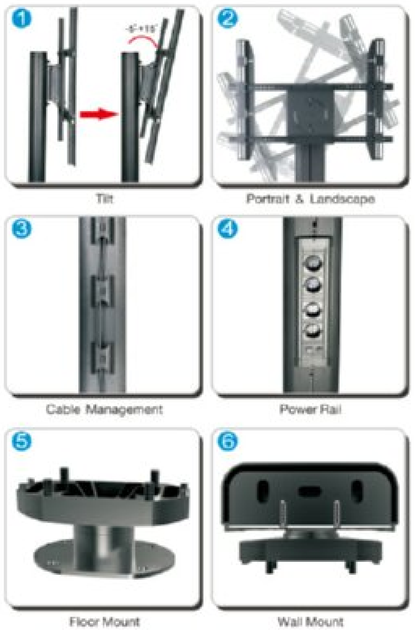

WM 106AL

Model	Color	Material	Suggest Size	Loading Capacity	VESA Standard	Tilt	Orientation
WM 106AL	Black or Silver	Alu./SPCC/ABS	30-60"	60kgs	Max.800*400	-5°- +15°	Landscape/Portrait

Product Details:

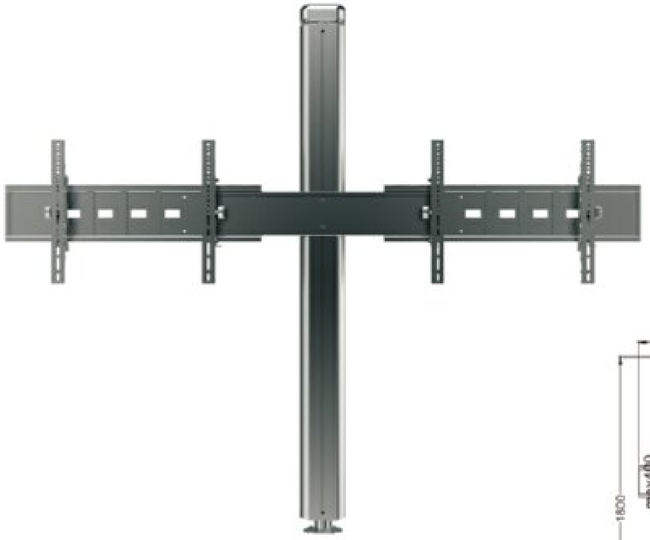

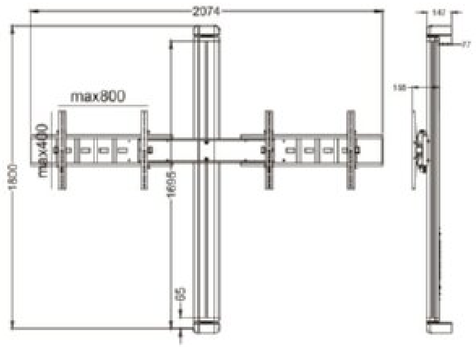

WM 202AL

Model	Color	Material	Suggest Size	Loading Capacity	VESA Standard	Tilt	Orientation
WM 202AL	Black or Silver	Alu./SPCC/ABS	30-60"	40kgs Per Mount	Max.800*400	-5°- +12°	Landscape

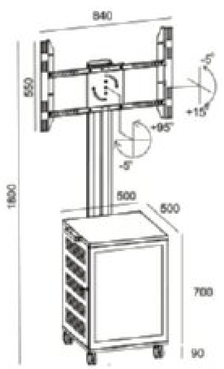

VRS 1000

Model	VRS 1000
Color	Black or Silver
Material	Alu./SPCC/Plexiglass
Suggest Size	30-60"
Loading Capacity/Mount	60kgs
Loading Capacity/Shelf	20kgs per Shelf
Loading Capacity on Top Cabinet	30kgs
VESA Standard	Max.800*400
Tilt	-5°- +15°
Orientation	Landscape & Portrait
Power Rail on Pillar	Yes
Power Rail in Cabinet	Yes
Cable Management	Yes

Product Details:

Product Details:

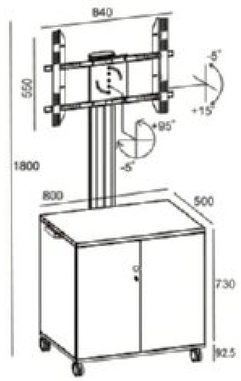

VRS 1000A

Model	VRS 1000A
Color	Black or Silver
Material	Alu./SPCC/Plexiglass
Suggest Size	30-60"
Loading Capacity/Mount	60kgs
Loading Capacity/Shelf	20kgs per Shelf
Loading Capacity on Top Cabinet	30kgs
VESA Standard	Max.800*400
Tilt	-5°- +15°
Orientation	Landscape & Portrait
Power Rail on Pillar	Yes
Power Rail in Cabinet	Yes
Cable Management	Yes

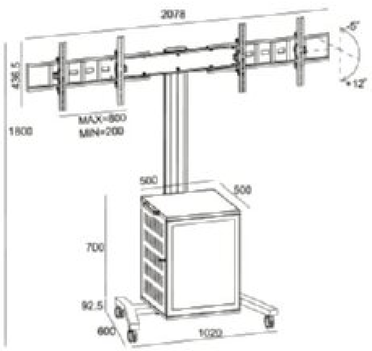

VRS 2000

Product Details:

Model	VRS 2000
Color	Black or Silver
Material	Alu./SPCC/Plexiglass
Suggest Size	30-60"
Loading Capacity/Mount	60kgs Per Mount
Loading Capacity/Shelf	20kgs per Shelf
Loading Capacity on Top Cabinet	30kgs
VESA Standard	Max.800*400
Tilt	-5°- +15°
Orientation	Landscape
Power Rail on Pillar	Yes
Power Rail in Cabinet	Yes
Cable Management	Yes

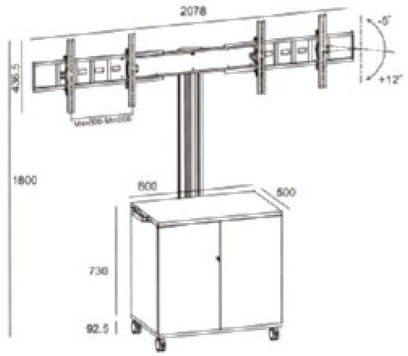

VRS 2000A

Product Details:

Model	VRS 2000A
Color	Black or Silver
Material	Alu./SPCC/Plexiglass
Suggest Size	30-60"
Loading Capacity/Mount	60kgs Per Mount
Loading Capacity/Shelf	20kgs per Shelf
Loading Capacity on Top Cabinet	30kgs
VESA Standard	Max.800*400
Tilt	-5°- +15°
Orientation	Landscape
Power Rail on Pillar	Yes
Power Rail in Cabinet	Yes
Cable Management	Yes

MB 002

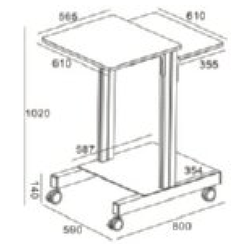

Product Details:

CPU Holder available

Color	Black or Silver
Material	Alu./SPCC/MDF
Loading Capacity	60kgs
Power Rail	Yes

Wood Color Available:

MB 003

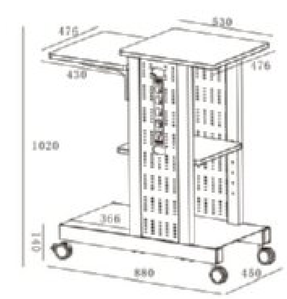

Color	Black or Silver
Material	Alu./Alu/SPCC
Loading Capacity	60kgs
Power Rail	Yes

Wood Color Available:

Product Details:

Cable Management
Castors
Power Rail
Shelf Height Adjustment
Power Rail
Wood Shelf Height Adjustment

Video Conference Mount & Stand

KOFORD DEVELOPMENT CO., LIMITED
www.kf-ind.com

MB 004

Color	Black or Silver
Material	SPCC/Plexiglass
Cable Management	
3 Shelves Adjustment	
Power rail inside Cabinet	
2pcs back doors & front doors W/Lock	
Plexiglass door for remote working	

Product Details:

MB 004A

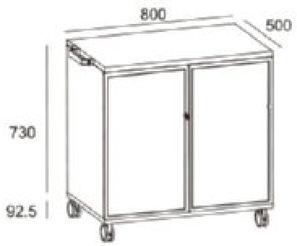

Color	Black or Silver
Material	SPCC/Plexiglass
Cable Management	
3 Shelves Adjustment	
Power rail inside Cabinet	
Front doors W/lock	
Punching metal door for remote working	

Product Details:

Alu.Public TV Floor Stand

Portrait

Lanscape

Product Details:

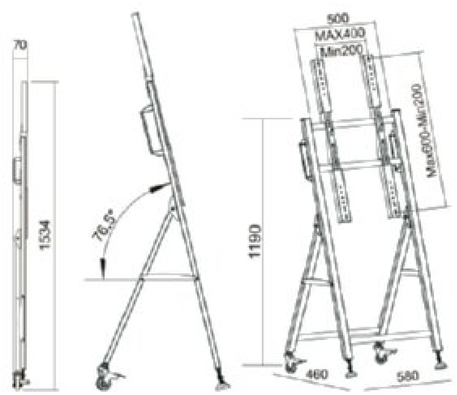

Mobile TV Cart
EAS 001

Model	Suggest Size	Material	VESA Standard	Loading Capacity	Orientation	Cable Management
EAS 001	30-55"	Steel	Max 400*600 Portrait Max 400*400 Landscape	60kgs	Lanscape & Portrait	Yes

iSPACE
Better Choice of View

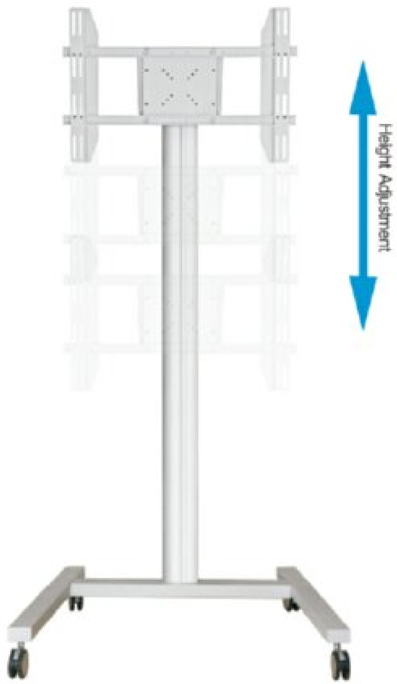

Product Details:

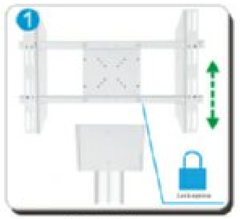

Quick Release

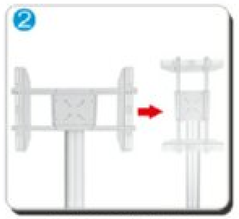

Landscape & Portrait

Cable Management

Mobile TV Cart
AVA-109A

Mobile TV Cart
AVA-109C

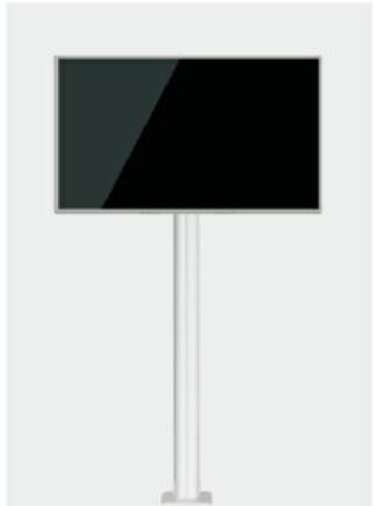

TV Floor Stand
AVA-109D

Model	Color	Material	Suggest Size	Loading Capacity	VESA Standard	Tilt	Orientation	Power Rail	Cable Management
AVA 109A	Black or Silver	Alu./SPCC	30-60"	50kgs	Max 700*400	0°	Landscape/Portrait	No	Yes
AVA 109C	Black or Silver	Alu./SPCC	30-60"	50kgs	Max 700*400	0°	Landscape/Portrait	No	Yes
AVA 109D	Black or Silver	Alu./SPCC	30-60"	50kgs	Max 700*400	0°	Landscape/Portrait	No	Yes

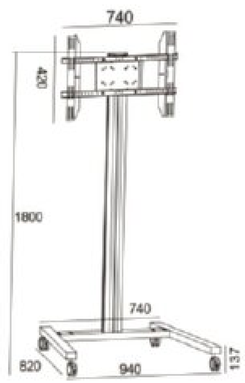

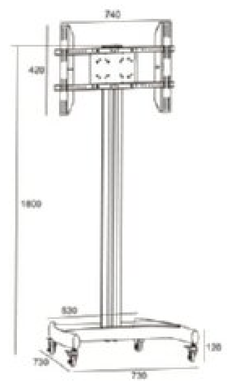

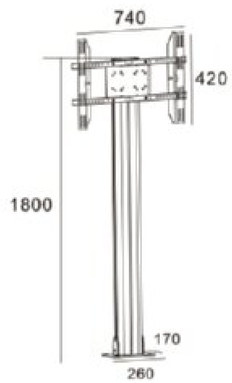

TV Floor Stand
AVA-109E

Mobile TV Cart
AVA-109F

Model	Color	Material	Suggest Size	Loading Capacity	VESA Standard	Tilt	Orientation	Power Rail	Cable Management
AVA 109E	Black or Silver	Alu./SPCC	30-60"	50kgs	Max 700*400	0°	Landscape/Portrait	No	Yes
AVA 109F	Black or Silver	Alu./SPCC	30-60"	50kgs	Max 700*400	0°	Landscape/Portrait	No	Yes

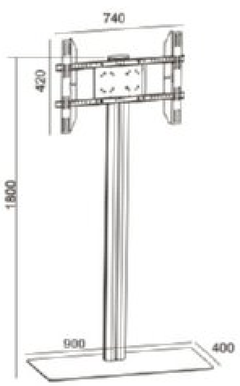

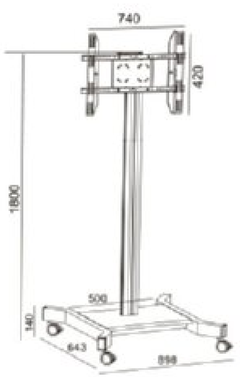

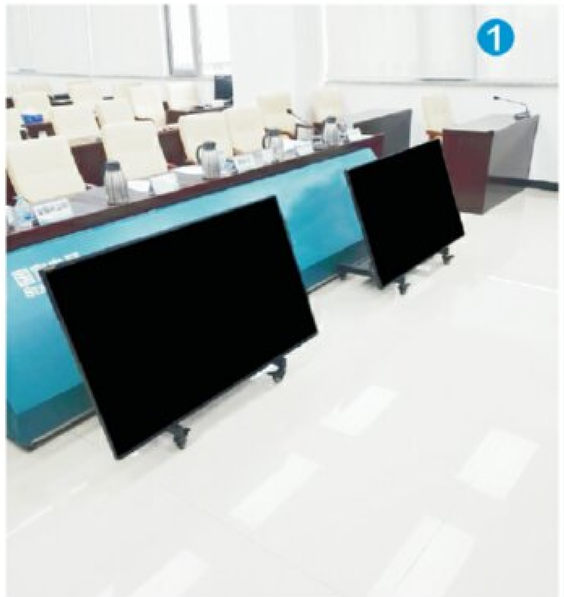

Product Details:

VESA 200*200

Cable Management

Vertical / Tilt / Table

Mobile TV Cart
AVA-101A

Mobile TV Cart
AVA-101B

TV Floor Stand
AVA-101D

Mobile TV Cart
AVA-101F

Model	Color	Material	Suggest Size	Loading Capacity	VESA Standard	Tilt	Orientation	Power Rail	Cable Management
AVA 101A	Black or Silver	Alu./SPCC	32-55"	60kgs	Max 700*400	0°- 45°- 90°	Landscape	No	Yes
AVA 101B	Black or Silver	Alu./SPCC	32-55"	60kgs	Max 700*400	0°- 45°- 90°	Landscape	No	Yes
AVA 101D	Black or Silver	Alu./SPCC	32-55"	60kgs	Max 700*400	0°- 45°- 90°	Landscape	No	Yes
AVA 101F	Black or Silver	Alu./SPCC	32-55"	60kgs	Max 700*400	0°- 45°- 90°	Landscape	No	Yes

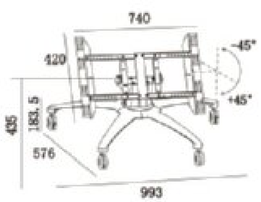

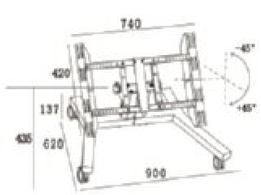

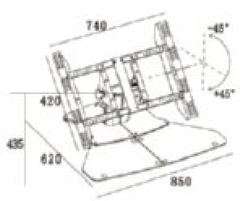

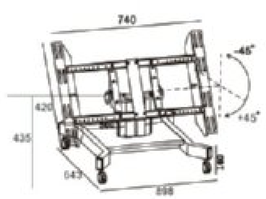

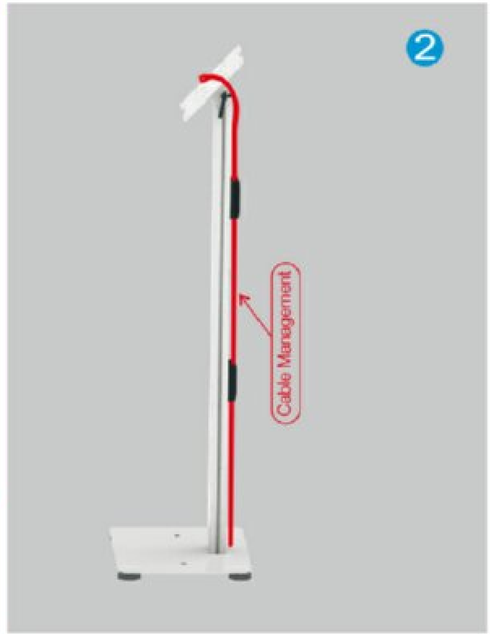

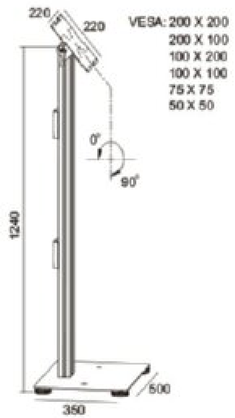

TV Floor Stand
AVA-103A

Product Details:

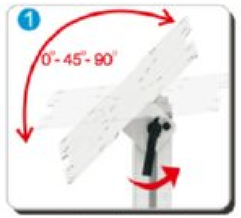

Vertical / Tilt / Table

Adjustable Feet

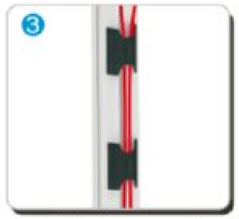

Cable Management

Hole for security screw

Model	Color	Material	Suggest Size	Loading Capacity	VESA Standard	Tilt	Orientation	Power Rail	Cable Management
AVA 103A	Black or Silver	Alu./SPCC	10-32"	15kgs	Max 200X200, 200X100 100X200, 100X100 75X75 , 50X50	0°- 45°- 90°	Landscape	No	Yes

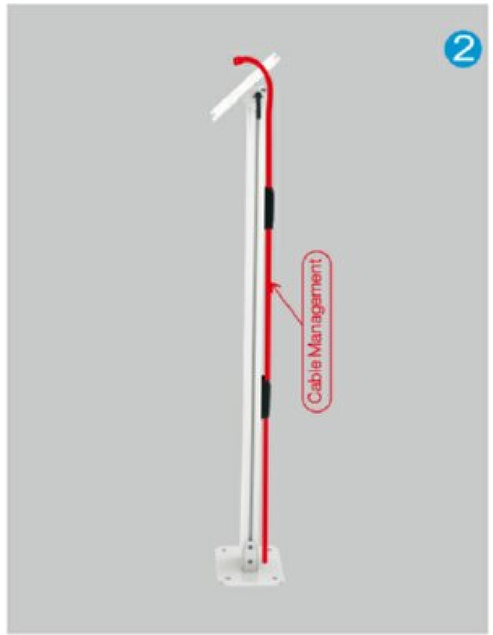

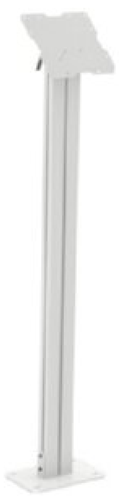

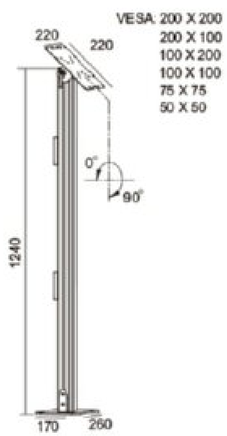

Product Details:

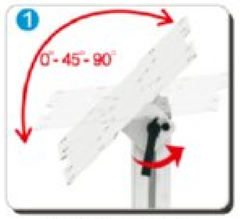

Vertical / Tilt / Table

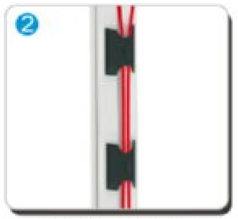
Cable Management

Hole for security screw

TV Floor Stand
AVA-103B

Model	Color	Material	Suggest Size	Loading Capacity	VESA Standard	Tilt	Orientation	Power Rail	Cable Management
AVA 103B	Black or Silver	Alu./SPCC	10-32"	15kgs	Max 200X200, 200X100 100X200, 100X100 75X75 , 50X50	0°-45°-90°	Landscape	No	Yes

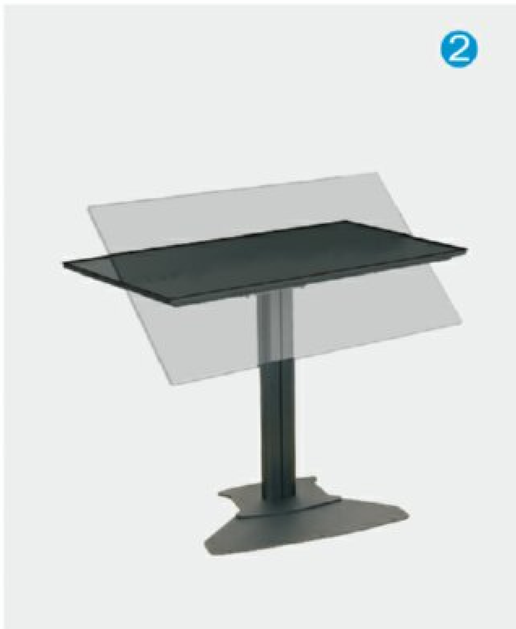

Product Details:

VESA 200*200

Cable Management

Vertical / Tilt / Table

Power Rail

Mobile TV Cart
AVA-102A

Mobile TV Cart
AVA-102B

Mobile TV Cart
AVA-102C

TV Floor Stand
AVA-102D

Mobile TV Cart
AVA-102F

Model	Color	Material	Suggest Size	Loading Capacity	VESA Standard	Tilt	Orientation	Power Rail	Cable Management
AVA 102A	Black or Silver	Alu./SPCC	32-55"	60kgs	Max 700*400	0°- 45°- 90°	Landscape	Yes	Yes
AVA 102B	Black or Silver	Alu./SPCC	32-55"	60kgs	Max 700*400	0°- 45°- 90°	Landscape	Yes	Yes
AVA 102C	Black or Silver	Alu./SPCC	32-55"	60kgs	Max 700*400	0°- 45°- 90°	Landscape	Yes	Yes
AVA 102D	Black or Silver	Alu./SPCC	32-55"	60kgs	Max 700*400	0°- 45°- 90°	Landscape	Yes	Yes
AVA 102F	Black or Silver	Alu./SPCC	32-55"	60kgs	Max 700*400	0°- 45°- 90°	Landscape	Yes	Yes

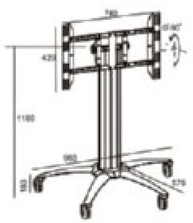

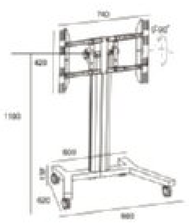

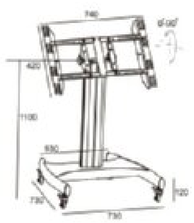

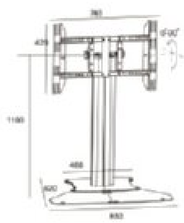

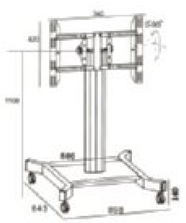

Product Details:

Landscape / Portrait

Tilt

Cable Management

Power Rail

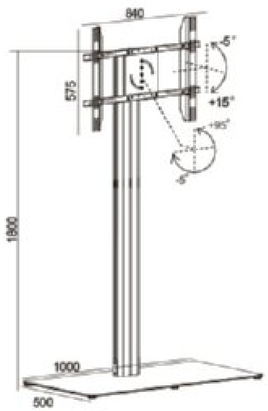

Mobile TV Cart
AVA-106DL

Model	Color	Material	Suggest Size	Loading Capacity	VESA Standard	Tilt	Orientation	Power Rail	Cable Management
AVA 106DL	Black or Silver	Alu./SPCC	30-60"	60kgs	Max 800*400	-5°- +15°	Landscape/Portrait	Yes	Yes

Product Details:

Landscape / Portrait

Tilt

Cable Management

Power Rail

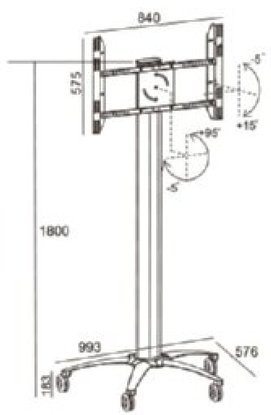

Mobile TV Cart
AVA-106A

Model	Color	Material	Suggest Size	Loading Capacity	VESA Standard	Tilt	Orientation	Power Rail	Cable Management
AVA 106A	Black or Silver	Alu./SPCC	30-60"	60kgs	Max 800*400	-5°- +15°	Landscape/Portrait	Yes	Yes

Mobile TV Cart
AVA-106B

Hidden Wheel Mobile TV Cart
AVA-106B1

Mobile TV Cart
AVA-106C

Model	Color	Material	Suggest Size	Loading Capacity	VESA Standard	Tilt	Orientation	Power Rail	Cable Management
AVA 106B	Black or Silver	Alu./SPCC	30-60"	60kgs	Max 800*400	-5°- +15°	Landscape/Portrait	Yes	Yes
AVA 106B1	Black or Silver	Alu./SPCC	30-60"	60kgs	Max 800*400	-5°- +15°	Landscape/Portrait	Yes	Yes
AVA 106C	Black or Silver	Alu./SPCC	30-60"	60kgs	Max 800*400	-5°- +15°	Landscape/Portrait	Yes	Yes

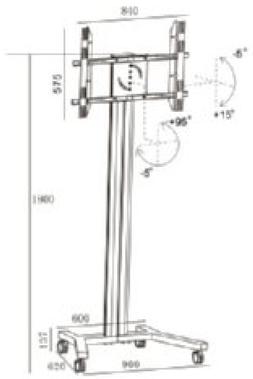

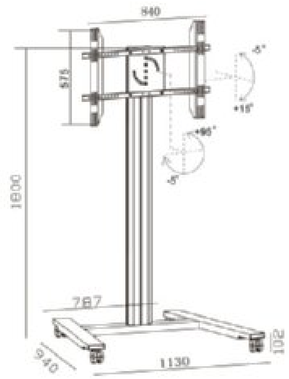

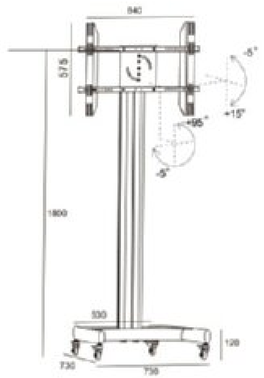

TV Floor Stand
AVA-106D

TV Floor Stand
AVA-106E

Mobile TV Cart
AVA-106F

Model	Color	Material	Suggest Size	Loading Capacity	VESA Standard	Tilt	Orientation	Power Rail	Cable Management
AVA 106D	Black or Silver	Alu./SPCC	30-60"	60kgs	Max 800*400	-5°- +15°	Landscape/Portrait	Yes	Yes
AVA 106E	Black or Silver	Alu./SPCC	30-60"	60kgs	Max 800*400	-5°- +15°	Landscape/Portrait	Yes	Yes
AVA 106F	Black or Silver	Alu./SPCC	30-60"	60kgs	Max 800*400	-5°- +15°	Landscape/Portrait	Yes	Yes

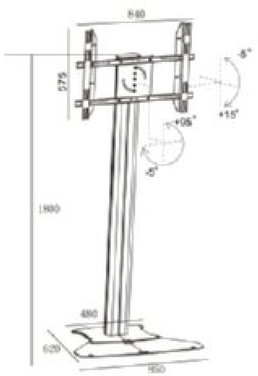

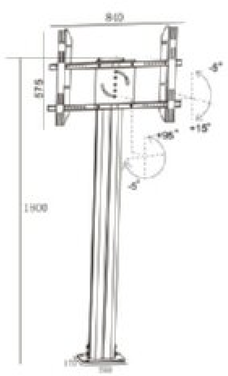

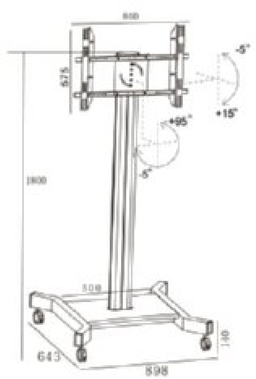

Product Details:

Landscape / Portrait

Tilt

Cable Management

Power Rail

Media Box

Mobile TV Cart
AVB-106A

Mobile TV Cart
AVB-106B

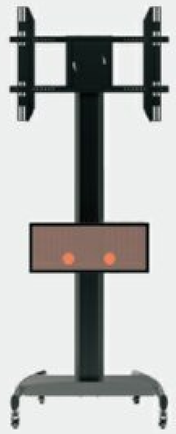

Mobile TV Cart
AVB-106C

Model	Color	Material	Suggest Size	Loading Capacity	VESA Standard	Tilt	Orientation	Power Rail	Cable Management
AVB 106A	Black or Silver	Alu./SPCC	30-60"	60kgs	Max 800*400	-5°- +15°	Landscape/Portrait	Yes	Yes
AVB 106B	Black or Silver	Alu./SPCC	30-60"	60kgs	Max 800*400	-5°- +15°	Landscape/Portrait	Yes	Yes
AVB 106C	Black or Silver	Alu./SPCC	30-60"	60kgs	Max 800*400	-5°- +15°	Landscape/Portrait	Yes	Yes

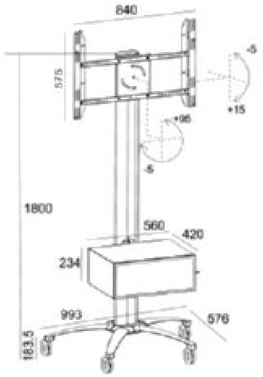

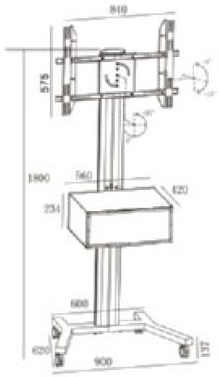

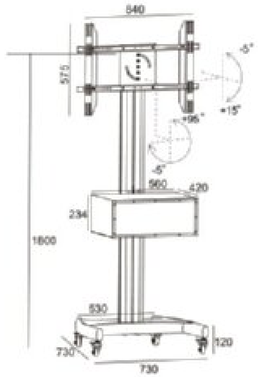

TV Floor Stand
AVB-106D

Mobile TV Cart
AVB-106F

Model	Color	Material	Suggest Size	Loading Capacity	VESA Standard	Tilt	Orientation	Power Rail	Cable Management
AVB 106D	Black or Silver	Alu./SPCC	30-60"	60kgs	Max 800*400	-5°- +15°	Landscape/Portrait	Yes	Yes
AVB 106F	Black or Silver	Alu./SPCC	30-60"	60kgs	Max 800*400	-5°- +15°	Landscape/Portrait	Yes	Yes

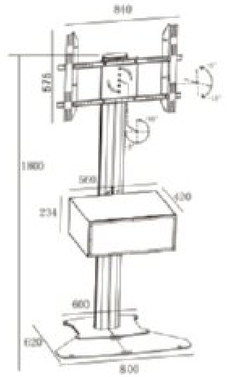

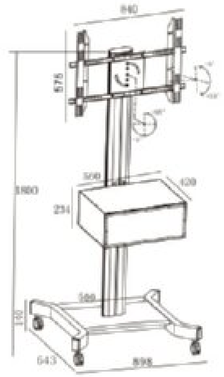

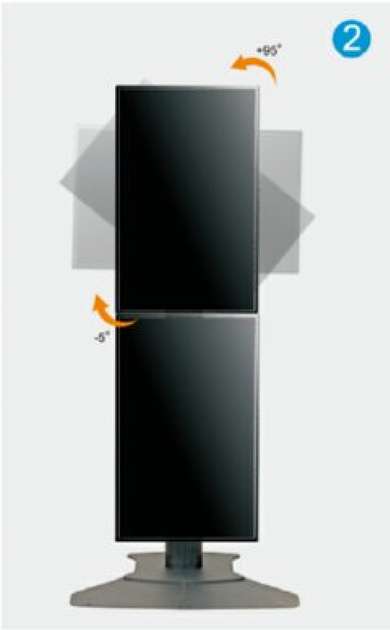

Product Details:

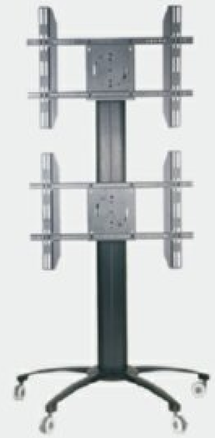

Mobile TV Cart
AVA-201A

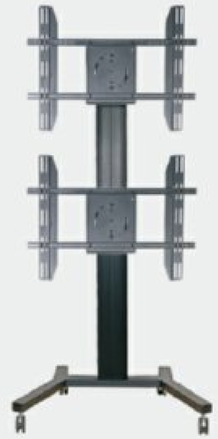

Mobile TV Cart
AVA-201B

Hidden Wheel
Mobile TV Cart
AVA-201B1

Model	Color	Material	Suggest Size	Loading Capacity	VESA Standard	Tilt	Orientation	Power Rail	Cable Management
AVA 201A	Black or Silver	Alu./SPCC	30-60"	60kgs	Max 800*400	-5°- +15°	Landscape/Portrait	Yes	Yes
AVA 201B	Black or Silver	Alu./SPCC	30-60"	60kgs	Max 800*400	-5°- +15°	Landscape/Portrait	Yes	Yes
AVA 201B1	Black or Silver	Alu./SPCC	30-60"	60kgs	Max 800*400	-5°- +15°	Landscape/Portrait	Yes	Yes

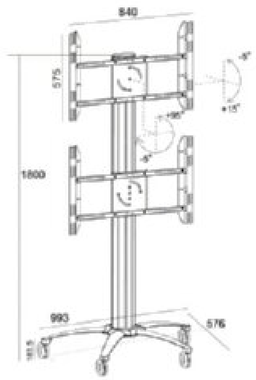

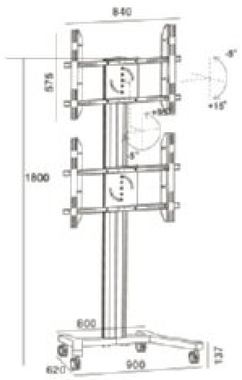

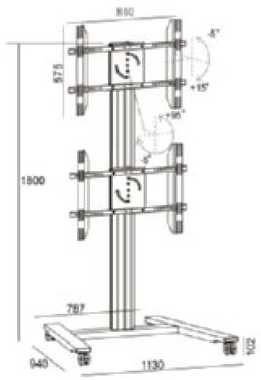

Alu.Public TV Floor Stand

KOFORD DEVELOPMENT CO., LIMITED
www.kf-ind.com

Mobile TV Cart
AVA-201C

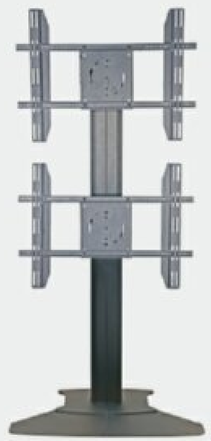

TV Floor Stand
AVA-201D

Mobile TV Cart
AVA-201F

Model	Color	Material	Suggest Size	Loading Capacity	VESA Standard	Tilt	Orientation	Power Rail	Cable Management
AVA 201C	Black or Silver	Alu./SPCC	30-60"	60kgs	Max 800*400	-5°- +15°	Landscape/Portrait	Yes	Yes
AVA 201D	Black or Silver	Alu./SPCC	30-60"	60kgs	Max 800*400	-5°- +15°	Landscape/Portrait	Yes	Yes
AVA 201F	Black or Silver	Alu./SPCC	30-60"	60kgs	Max 800*400	-5°- +15°	Landscape/Portrait	Yes	Yes

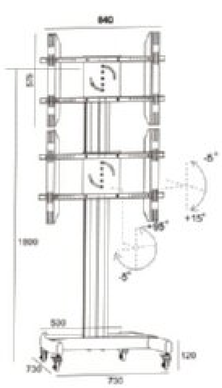

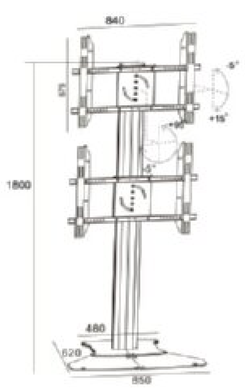

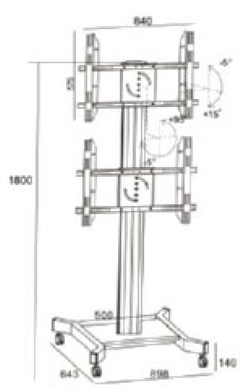

Mobile TV Cart
AVA-202A

Mobile TV Cart
AVA-202B

Hidden Wheel
Mobile TV Cart
AVA-202B1

Product Details:

Tilt

screw Locking

Fine Tine Adjustment for Screen level

Cable Management

Power Rail

Model	Color	Material	Suggest Size	Loading Capacity	VESA Standard	Tilt	Orientation	Power Rail	Cable Management
AVA 202A	Black or Silver	Alu./SPCC	30-60"	40kgs Per Mount	Max .800*400	-5°- +15°	Landscape/Portrait	Yes	Yes
AVA 202B	Black or Silver	Alu./SPCC	30-60"	40kgs Per Mount	Max .800*400	-5°- +15°	Landscape/Portrait	Yes	Yes
AVA 202B1	Black or Silver	Alu./SPCC	30-60"	40kgs Per Mount	Max .800*400	-5°- +15°	Landscape/Portrait	Yes	Yes

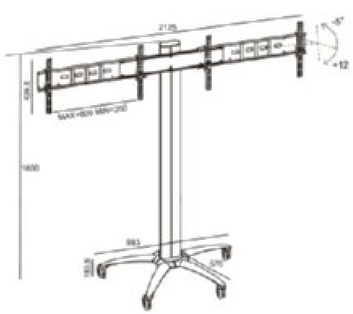

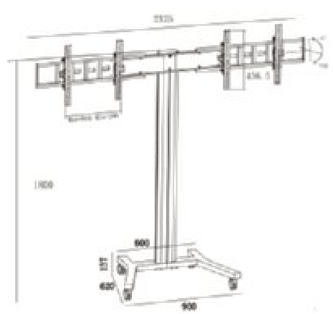

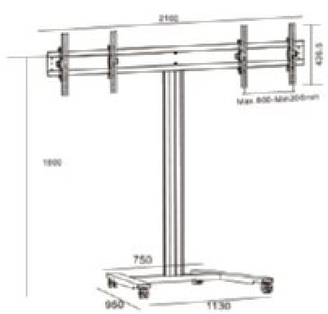

Mobile TV Cart
AVA-202C

TV Floor Stand
AVA-202D

Mobile TV Cart
AVA-202F

Product Details:

Tilt

screw Locking

Fine Tine Adjustment for Screen level

Cable Management

Power Rail

Model	Color	Material	Suggest Size	Loading Capacity	VESA Standard	Tilt	Orientation	Power Rail	Cable Management
AVA 202C	Black or Silver	Alu./SPCC	30-60"	40kgs Per Mount	Max. 800*400	-5°- +15°	Landscape/Portrait	Yes	Yes
AVA 202D	Black or Silver	Alu./SPCC	30-60"	40kgs Per Mount	Max .800*400	-5°- +15°	Landscape/Portrait	Yes	Yes
AVA 202F	Black or Silver	Alu./SPCC	30-60"	40kgs Per Mount	Max .800*400	-5°- +15°	Landscape/Portrait	Yes	Yes

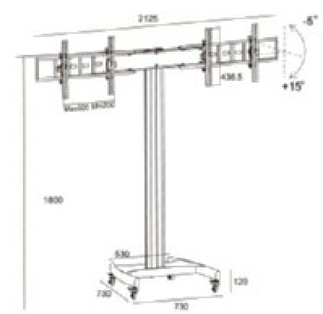

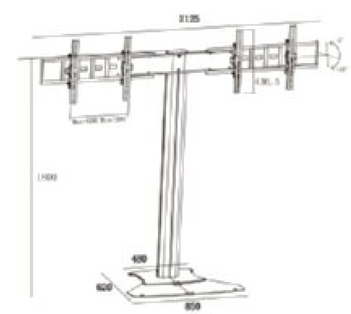

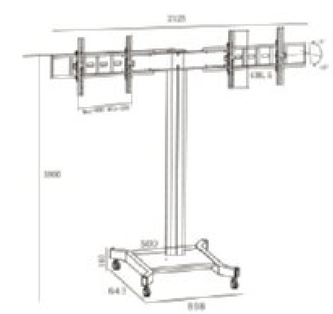

Mobile TV Cart
AVA-203A

Mobile TV Cart
AVA-203B

Mobile TV Cart
AVA-203C

Product Details:

Tilt | screw Locking | Fine Tine Adjustment for Screen level | Cable Management | Power Rail | Media Box

Model	Color	Material	Suggest Size	Loading Capacity / Bracket	Loading Capacity / Cabinet	VESA Standard	Tilt	Orientation	Power Rail	Cable Management
AVA 203A	Black or Silver	Alu./SPCC	30-60"	40kgs Per Mount	20kgs	Max. 800*400	-5°- +15°	Landscape & Portrait	Yes	Yes
AVA 203B	Black or Silver	Alu./SPCC	30-60"	40kgs Per Mount	20kgs	Max. 800*400	-5°- +15°	Landscape & Portrait	Yes	Yes
AVA 203C	Black or Silver	Alu./SPCC	30-60"	40kgs Per Mount	20kgs	Max 800*400	-5°- +15°	Landscape & Portrait	Yes	Yes

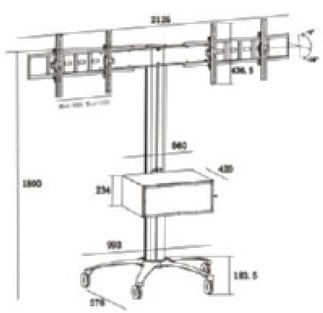

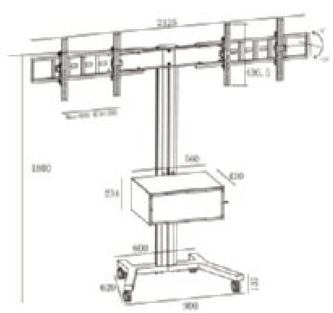

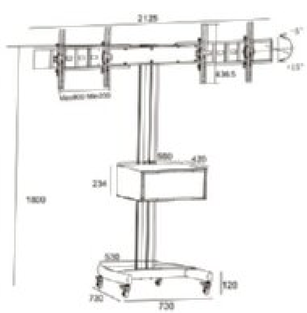

Mobile TV Cart
AVA-203D

TV Floor Stand
AVA-203F

Product Details:

Tilt | screw Locking | Fine Tine Adjustment for Screen level | Cable Management | Power Rail | Media Box

Model	Color	Material	Suggest Size	Loading Capacity / Bracket	Loading Capacity / Cabinet	VESA Standard	Tilt	Orientation	Power Rail	Cable Management
AVA 203D	Black or Silver	Alu./SPCC	30-60"	40kgs Per Mount	20kgs	Max. 800*400	-5°- +15°	Landscape & Portrait	Yes	Yes
AVA 203F	Black or Silver	Alu./SPCC	30-60"	40kgs Per Mount	20kgs	Max. 800*400	-5°- +15°	Landscape & Portrait	Yes	Yes

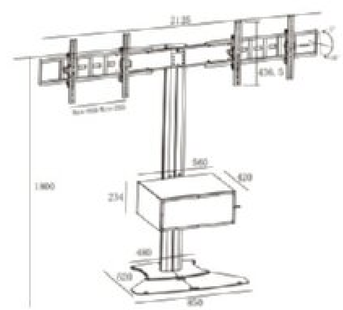

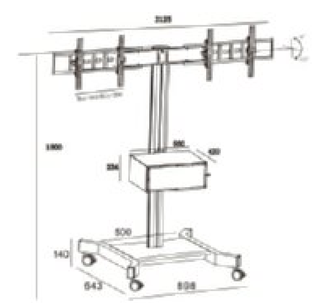

Adjustable Floorbase

TV Floor Stand
AVE-200DL

Product Details:

Landscape / Portrait

Tilt

Cable Management

Power Rail

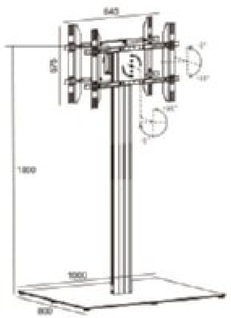

Model	Color	Material	Suggest Size	Loading Capacity	VESA Standard	Tilt	Orientation	Power Rail	Cable Management
AVE 200DL	Black or Silver	Alu./SPCC	30-60"	40kgs Per Mount	Max 800*400	-5°- +15°	Landscape/Portrait	Yes	Yes

TV Floor Stand
AVE-200A

Mobile TV Cart
AVE-200B

Model	Color	Material	Suggest Size	Loading Capacity	VESA Standard	Tilt	Orientation	Power Rail	Cable Management
AVE 200A	Black or Silver	Alu./SPCC	30-60"	40kgs Per Mount	Max 800*400	-5°- +15°	Landscape/Portrait	Yes	Yes
AVE 200B	Black or Silver	Alu./SPCC	30-60"	40kgs Per Mount	Max 800*400	-5°- +15°	Landscape/Portrait	Yes	Yes

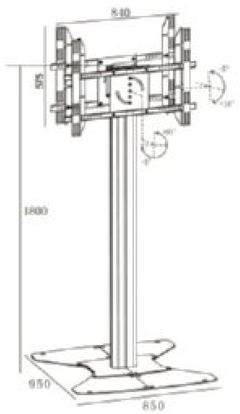

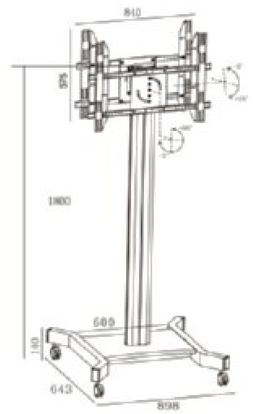

TV Floor Stand
AVE-200C

Hidden Wheel
Mobile TV Cart
AVE-200D

Model	Color	Material	Suggest Size	Loading Capacity	VESA Standard	Tilt	Orientation	Power Rail	Cable Management
AVE 200C	Black or Silver	Alu./SPCC	30-60"	40kgs Per Mount	Max 800*400	-5°- +15°	Landscape/Portrait	Yes	Yes
AVE 200D	Black or Silver	Alu./SPCC	30-60"	40kgs Per Mount	Max 800*400	-5°- +15°	Landscape/Portrait	Yes	Yes

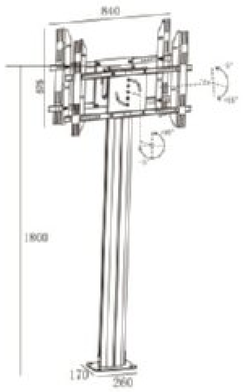

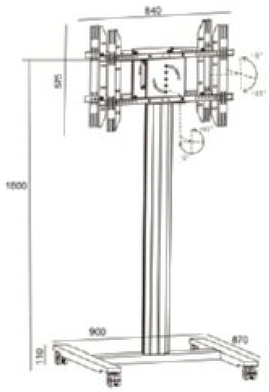

Alu.Public TV Floor Stand

Alu.Public TV Floor Stand

KOFORD DEVELOPMENT CO., LIMITED
www.kf-ind.com

TV Floor Stand
AVA -110A

Mobile TV Cart
AVA -110B

Product Details:

Tilt

Fine Tine Adjustment for Screen level

Wire Locking system With magnetic

Cable Management

Handling Bar

Model	Color	Material	Suggest Size	Loading Capacity	VESA Standard	Tilt	Orientation	Power Rail	Cable Management
AVA 110A	Black or Silver	Alu./SPCC	50-110"	125 kgs	Max.800*600	-5° - +15°	Landscape	No	Yes
AVA 110B	Black or Silver	Alu./SPCC	50-110"	125 kgs	Max.800*600	-5° - +15°	Landscape	No	Yes

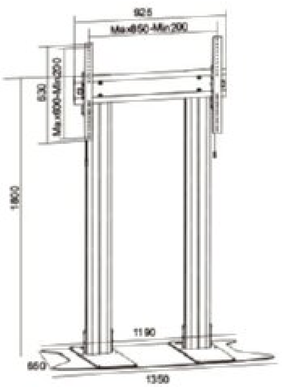

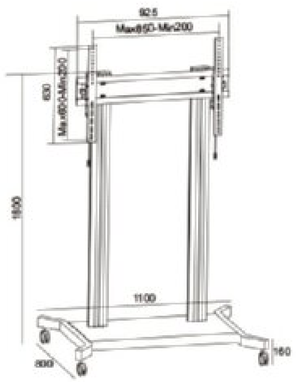

Alu.Public TV Floor Stand

ISPACE
Better Choice of View

TV Floor Stand
AVA -110C

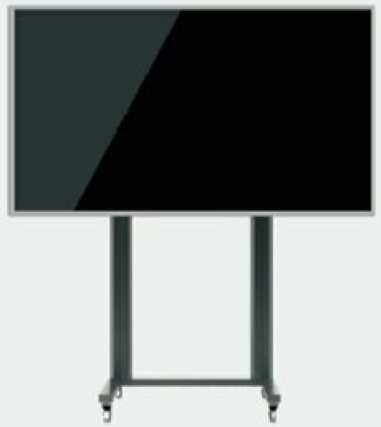

Mobile TV Cart
AVA -110F

Product Details:

Tilt

Fine Tine Adjustment for Screen level

Wire Locking system With magnetic

Cable Management

Handling Bar

Model	Color	Material	Suggest Size	Loading Capacity	VESA Standard	Tilt	Orientation	Power Rail	Cable Management
AVA 110C	Black or Silver	Alu./SPCC	50-110"	125 kgs	Max.800*600	-5° - +15°	Landscape	No	Yes
AVA 110F	Black or Silver	Alu./SPCC	50-110"	125 kgs	Max.800*600	-5° - +15°	Landscape	No	Yes

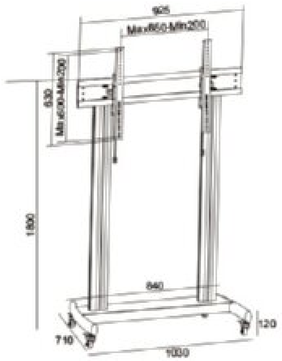

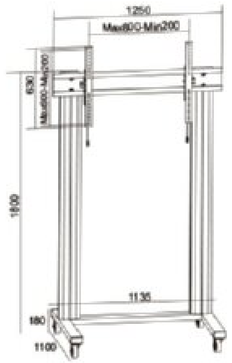

Product Details:

Tilt

Fine Tine Adjustment for Screen level

Wire Locking system With magnetic

Cable Management

Handling Bar

Height Adjustable

Cable Management

Mobile TV Cart
AVA-110CB

Mobile TV Cart
AVA-110FB

Model	Color	Material	Suggest Size	Loading Capacity /Bracket	Loading Capacity /Cabinet Shelf	VESA Standard	Orientation	Power Rail	Power Rail /Cabinet	Cable Management
AVA 110CB	Black or Silver	Alu./SPCC	50-110"	125kgs	20kgs per shelf	Max 800*600	Landscape	Yes	No,but optional	Yes
AVA 110FB	Black or Silver	Alu./SPCC	50-110"	125kgs	20kgs per shelf	Max 800*600	Landscape	Yes	No,but optional	Yes

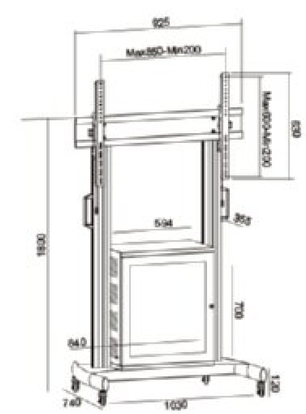

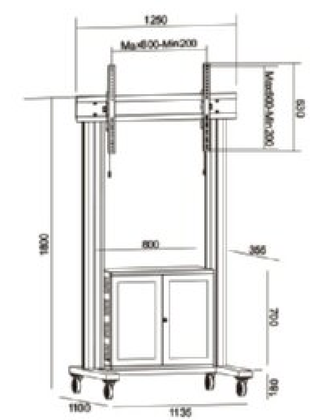

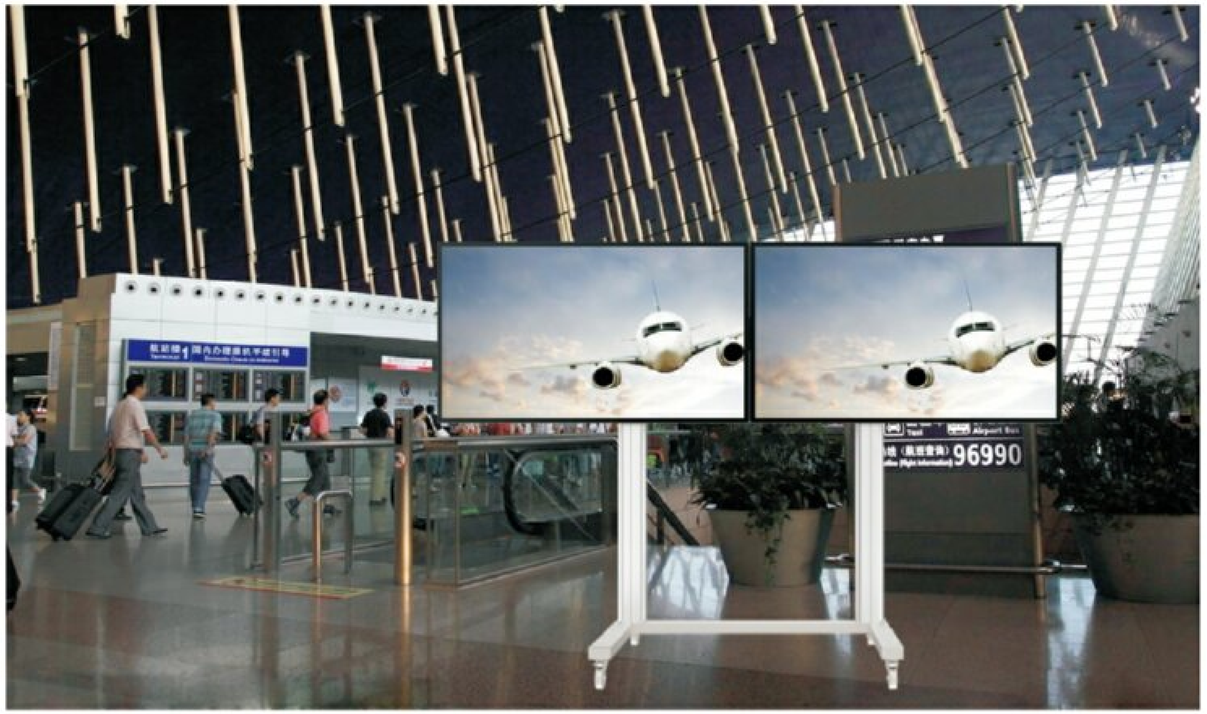

Mobile TV Cart
AVA-702A

Mobile TV Cart
AVA-902A

Product Details:

1 Tilt

2 Fine Tine Adjustment for Screen level

3 Wire Locking system With magnetic

4 Cable Management

5 Power Rail

Model	Color	Material	Suggest Size	Loading Capacity	VESA Standard	Tilt	Orientation	Cable Management
AVA 702A	Black or Silver	Alu./SPCC	55-70"	200kgs	Max. 800*600	-5° - +12°	Landscape	Yes
AVA 902A	Black or Silver	Alu./SPCC	70-110"	250kgs	Max.1200*900	-5° - +12°	Landscape	Yes

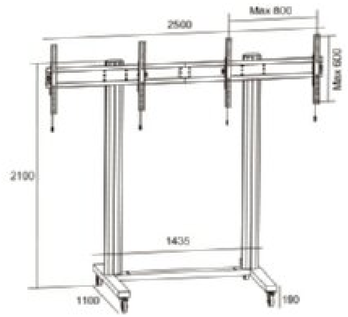

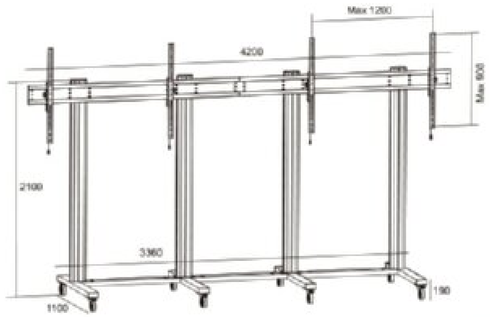

Alu.Public TV Floor Stand

ISPACE
Better Choice of View

Metal Base/Metal Tube/Metal Bracket
TV Floor Stand
SAV 102A

Stainless Steel Base/Stainless Steel Tube /Metal Bracket
TV Floor Stand
SAV 102B

Product Details:

Portrait & Landscape

Quick Release

Height Adjustable

Cable Management

Fine Tune Feet

Model	Suggest Size	Material	VESA Standard	Loading Capacity	Orientation	Cable Management
SAV 102A	30-60"	Steel	Max 700*400	50kgs	Lanscape & Portrait	Yes
SAV 102B	30-60"	Stainless Steel	Max 700*400	50kgs	Lanscape & Portrait	Yes

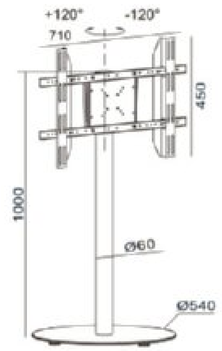

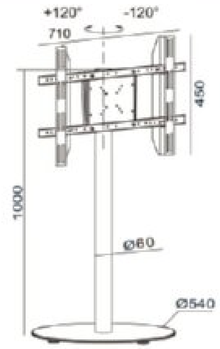

Alu.Public TV Floor Stand

KOFORD DEVELOPMENT CO. , LIMITED
www.kf-ind.com

Alu.Public TV Floor Stand

ISPACE
Better Choice of View

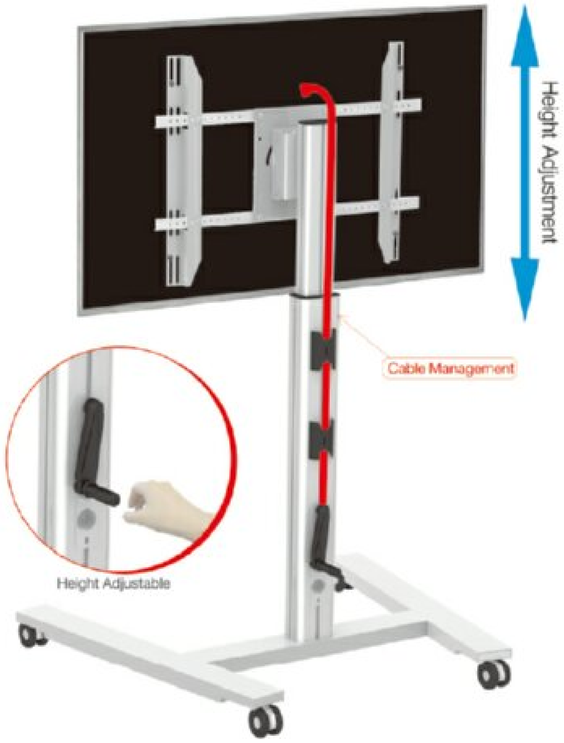

Product Details:

Portrait & Landscape

Tilt

Cable Management

Mobile TV Cart
CRK-105A

Mobile TV Cart
CRK-105B

Hidden Wheel
Mobile TV Cart
CRK-105B1

Model	Color	Material	Suggest Size	Loading Capacity	VESA Standard	Tilt	Orientation	Power Rail	Cable Management
CRK 105A	Black or Silver	Alu./SPCC	30-60"	50kgs	Max.800*400	-5°- +15°	Landscape/Portrait	No	Yes
CRK 105B	Black or Silver	Alu./SPCC	30-60"	50kgs	Max.800*400	-5°- +15°	Landscape/Portrait	No	Yes
CRK 105B1	Black or Silver	Alu./SPCC	30-60"	50kgs	Max.800*400	-5°- +15°	Landscape/Portrait	No	Yes

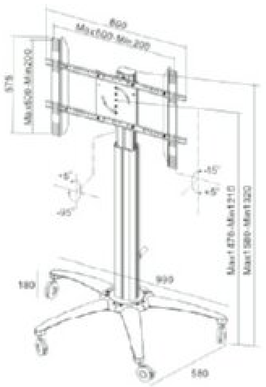

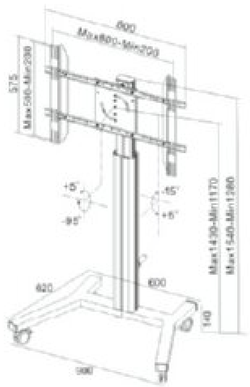

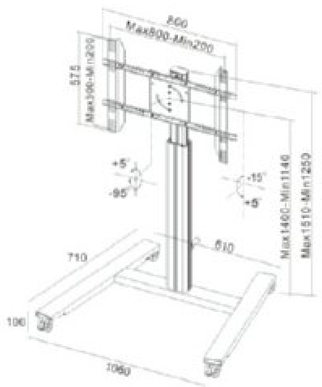

Mobile TV Cart
CRK-105C

Mobile TV Cart
CRK-105D

Mobile TV Cart
CRK-105E

Model	Color	Material	Suggest Size	Loading Capacity	VESA Standard	Tilt	Orientation	Power Rail	Cable Management
CRK 105C	Black or Silver	Alu./SPCC	30-60"	50kgs	Max.800*400	-5°- +15°	Landscape/Portrait	No	Yes
CRK 105D	Black or Silver	Alu./SPCC	30-60"	50kgs	Max.800*400	-5°- +15°	Landscape/Portrait	No	Yes
CRK 105E	Black or Silver	Alu./SPCC	30-60"	50kgs	Max.800*400	-5°- +15°	Landscape/Portrait	No	Yes

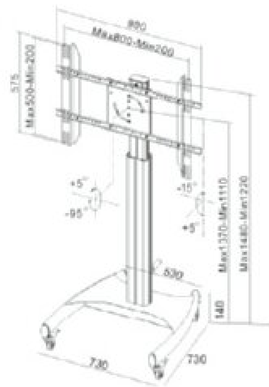

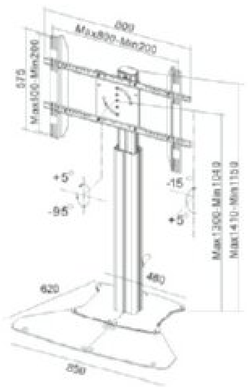

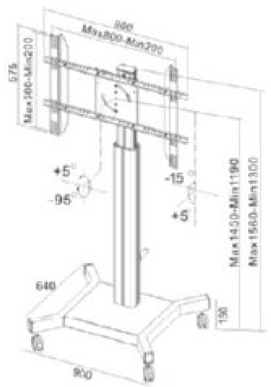

Metal Pillar TV Floor Stand

KOFORD DEVELOPMENT CO. , LIMITED
www.kf-ind.com

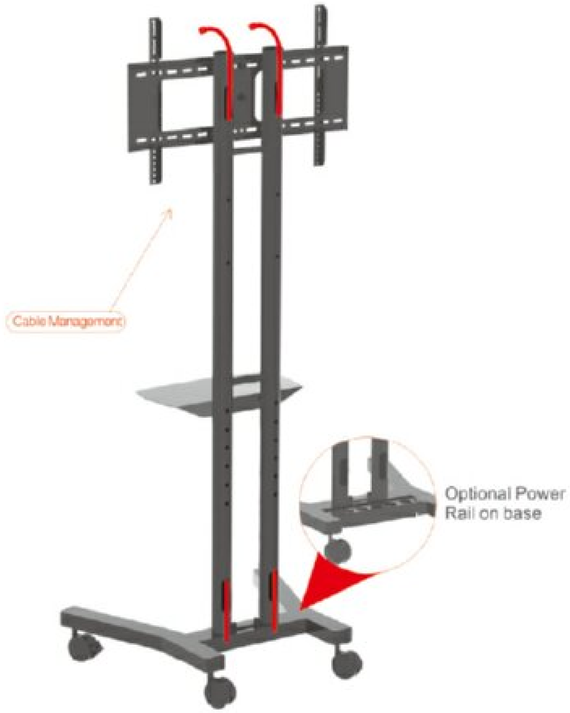

Product Details:

Cable Management

Height Adjustable

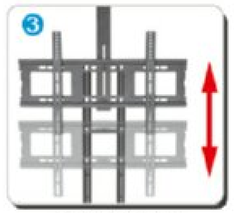
Height Adjustable

Screw locking

Optional Power Rail on base

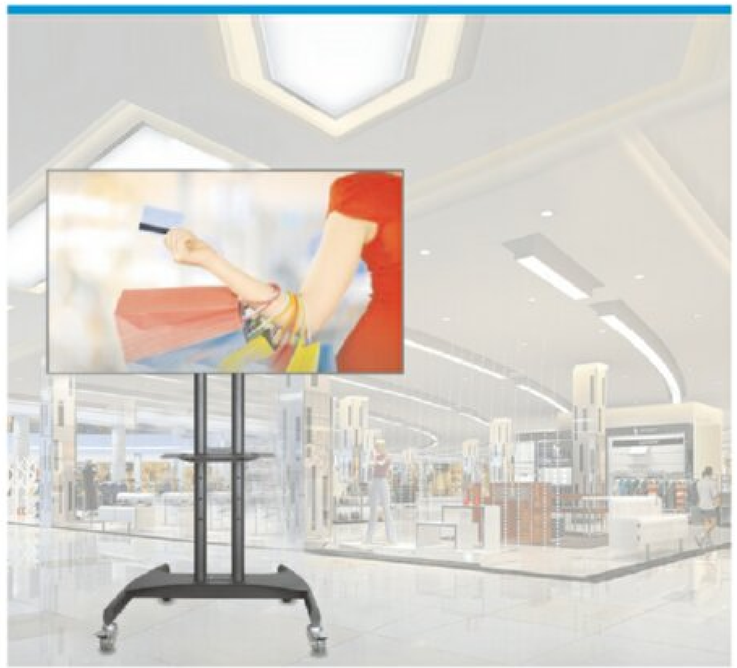

Optional Part: Codec Shelf and Camera Holder

Codec Shelf / PRT 001

Camera Holder CMR 002

Metal Pillar TV Floor Stand

ISPACE
Better Choice of View

Mobile TV Cart
SAV -106A1

Mobile TV Cart
SAV -107A

Model	Color	Material	Suggest Size	Loading Capacity	VESA Standard	Tilt	Orientation	Power Rail	Cable Management	Telescopic Tube
SAV 106A1	Black or Silver	Alu./SPCC	30-60"	50kgs	Max 600*400	0°	Landscape	No	Yes	No
SAV 107A	Black or Silver	Alu./SPCC	30-60"	60kgs	Max 600*400	0°	Landscape	No	Yes	No

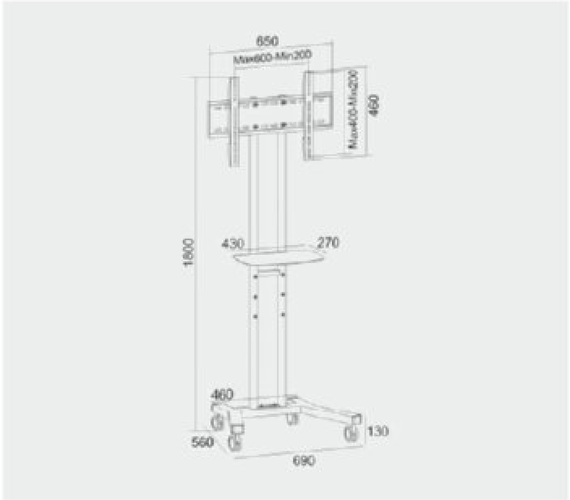

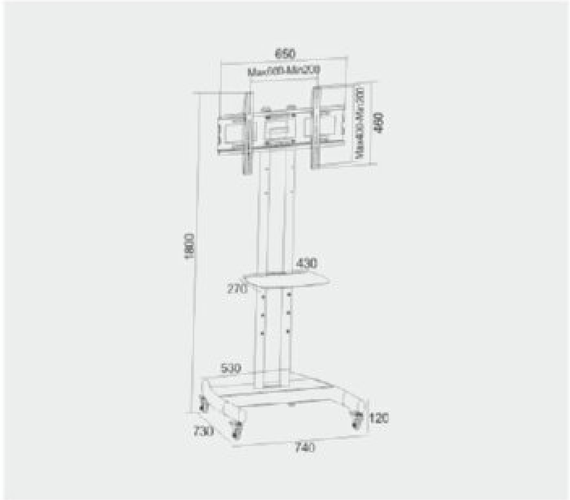

Metal Pillar TV Floor Stand

KOFORD DEVELOPMENT CO. , LIMITED
www.kf-ind.com

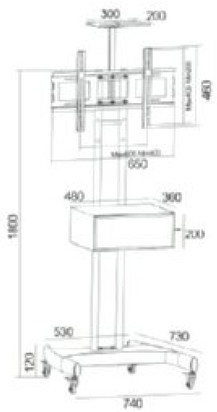

Mobile TV Cart
SAV -107C

Product Details:

Cable Management

Height Adjustable

Cable Management

Screw locking

Optional Part: Camera Holder

Camera Holder CMR 002

Model	Color	Material	Suggest Size	Loading Capacity	VESA Standard	Tilt	Orientation	Power Rail	Cable Managament	Telescopic Tube
SAV 107C	Black or Silver	Alu./SPCC	30-60"	50kgs/Bracket 10kgs/Box	Max 600*400	0°	Landscape	No	Yes	No

Metal Pillar TV Floor Stand

ISPACE
Better Choice of View

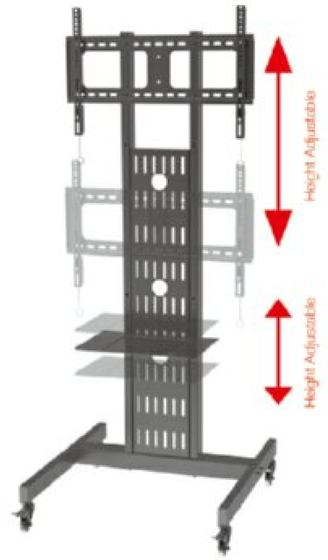

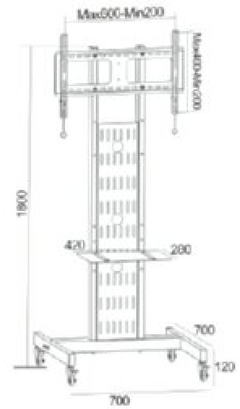

Mobile TV Cart
SAV -108A

Product Details:

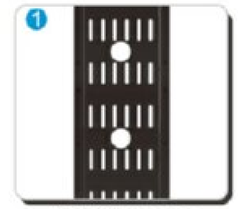
Cable Management

Screw locking

Optional Part: Codec Shelf and

Codec Shelf / PRT 001

Model	SAV 108A
Color	Black or Silver
Material	Alu./SPCC
Suggest Size	37-70"
Loading Capacity	60kgs
VESA Standard	Max 600*400
Tilt	0°
Orientation	Landscape
Power Rail	No
Cable Management	Yes
Telescopic Tube	No

Mobile TV Cart
SAV -108B

Product Details:

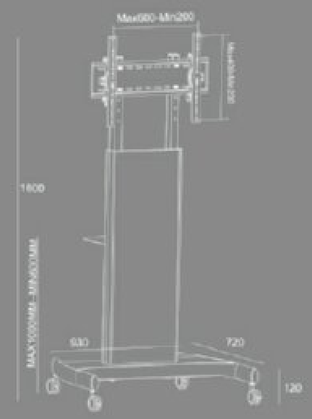

Tilt

Height Adjusable DVD Shelf

Wood Decoration

Model	SAV 108B
Color	Black or Silver
Material	Alu./SPCC
Suggest Size	30-60"
Loading Capacity	60kgs
VESA Standard	Max 600*400
Tilt	0°
Orientation	Landscape
Power Rail	No
Cable Management	Yes
Telescopic Tube	No

Product Details:

Tilt

Wire Locking System
With Magnetic

Fine tune Adjustment for
Screen Level

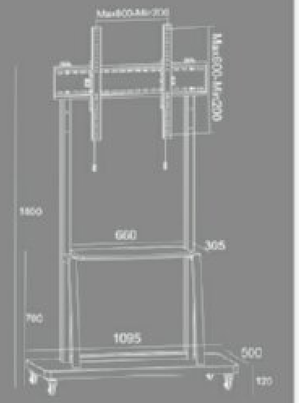

Mobile TV Cart
SAV -110A

Model	SAV 110A
Color	Black or Silver
Material	Alu./SPCC
Suggest Size	70-110"
Loading Capacity	125kgs
VESA Standard	Max 800*600
Tilt	-5° - +15°
Orientation	Landscape
Power Rail	No
Cable Management	Yes
Telescopic Tube	No

Model	MT 001A	MT 001B	MT 001D	MT 001E
Color	Black or Silver	Black or Silver	Black or Silver	Black or Silver
Material	Alu./SPCC	Alu./SPCC	Alu./SPCC	Alu./SPCC
Suggest size	32-70"	32-70"	32-70"	32-70"
Loading Capacity	80kgs	80kgs	80kgs	80kgs
Optional Parts	Codec Shelf	Codec Shelf	Codec Shelf	Codec Shelf
Screen Adjustable Tilt	-15°- +15°	-15°- +15°	-15°- +15°	-15°- +15°
Height	Min.1250mm-Max1800mm	Min.1250mm-Max1800mm	Min.1250mm-Max1800mm	Min.1250mm-Max1800mm
Lift Distance	450mm	450mm	450mm	450mm
Lift Speed	15mm Per second	15mm Per second	15mm Per second	15mm Per second
Input Power	AC 220-240V, Max 6A	AC 220-240V, Max 6A	AC 220-240V, Max 6A	AC 220-240V, Max 6A
Output	12V DC 2A	12V DC 2A	12V DC 2A	12V DC 2A
Frequency	2.4G HZ	2.4G HZ	2.4G HZ	2.4G HZ
Remote Control Distance	Max 15 meters	Max 15 meters	Max 15 meters	Max 15 meters
VESA Standard	Max.800(L)*400(W)mm/Min 200*200	Max.800(L)*400(W)mm/Min 200*200	Max.800(L)*400(W)mm/Min 200*200	Max.800(L)*400(W)mm/Min 200*200
Orientation	Landscape & Portrait	Landscape & Portrait	Landscape & Portrait	Landscape & Portrait
Features	Cable Management / Wheel base	Cable Management / Wheel base	Cable Management / Floorbase	Cable Management / Floorbase

Product Details:

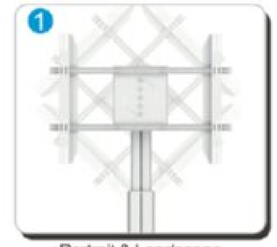

Portrait & Landscape

Tilt

Remote Holder on Pillar Side

Remote Control

Cable Management

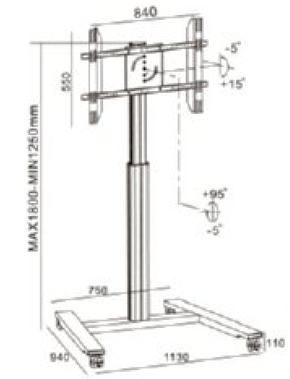

MT 001A

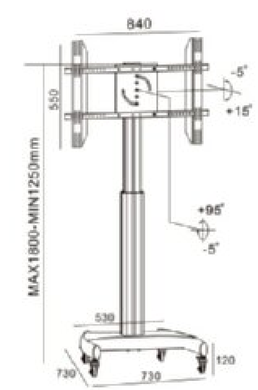

MT 001B

Product Details:

Portrait & Landscape

Tilt

Remote Holder on Pillar Side

Remote Control

Cable Management

MT 001D

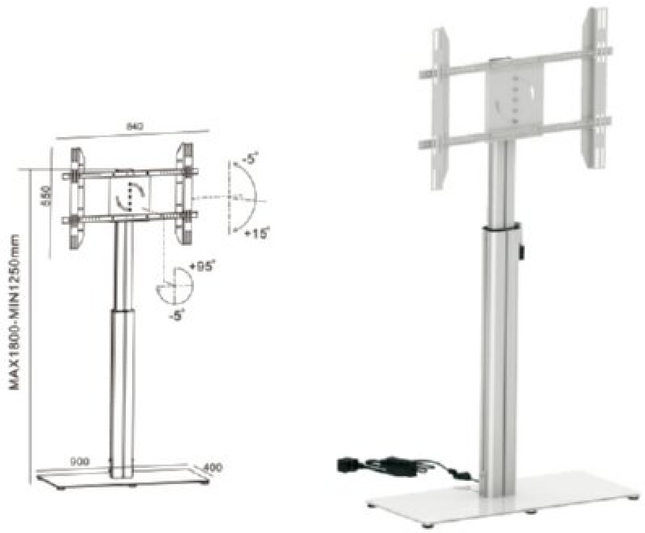

MT 001E

Model	MT 002A	MT 002B	MT 002E
Color	Black or Silver	Black or Silver	Black or Silver
Material	Alu./SPCC	Alu./SPCC	Alu./SPCC
Suggest size	47-94"	47-94"	47-94"
Loading Capacity	125kgs	125kgs	125kgs
Optional Parts	Codec Shelf	Codec Shelf	Codec Shelf
Screen Adjustable Tilt	-15°- +15°	-15°- +15°	-15°- +15°
Height	Min.1250mm-Max1800mm	Min.1250mm-Max1800mm	Min.1250mm-Max1800mm
Lift Distance	450mm	450mm	450mm
Lift Speed	15mm Per second	15mm Per second	15mm Per second
Input Power	AC 220-240V, Max 6A	AC 220-240V, Max 6A	AC 220-240V, Max 6A
Output	12V DC 2A	12V DC 2A	12V DC 2A
Frequency	2.4G HZ	2.4G HZ	2.4G HZ
Remote Control Distance	Max 15 meters	Max 15 meters	Max 15 meters
VESA Standard	Max.800(L)*600(W)mm / Min 200*200	Max.800(L)*600(W)mm / Min 200*200	Max.800(L)*600(W)mm / Min 200*200
Orientation	Landscape	Landscape	Landscape
Features	Cable Management / Wheel base	Cable Management / Wheel base	Cable Management / Floorbase

Product Details:

Tilt

Screw Locking

Fine Tine Adjustment for Screen Level

Remote Holder on Pillar Side

Remote Control

Cable Management

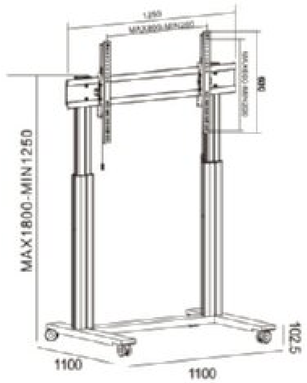

Hidden Wheel

MT 002A

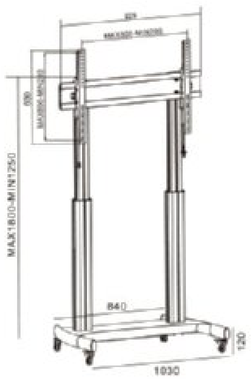

MT 002B

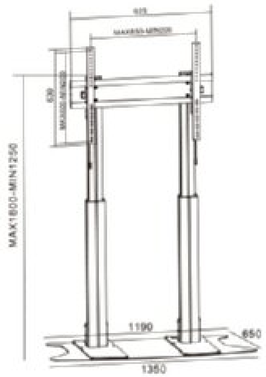

MT 002E

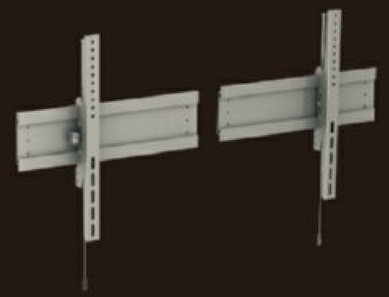

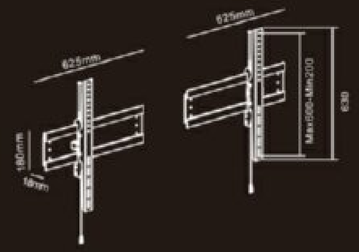

Multiple Screens Solution

MTK 001

Model	MT K001
Color	Black or Silver
Material	Alu. / SPCC
Suggest size	30-65"
Loading Capacity	60kgs per screen
Screen Adjustable Tilt	10 degree
Horizontal length after mount on dual pillar	2500mm
Vertical Arm Hole Size	Max 600mm W/ M10 hole
VESA Standard after mount on dual pillar	Max. 800(L)*600(W)mm / Min 200*200
Orientation	Landscape
Features	Cable management

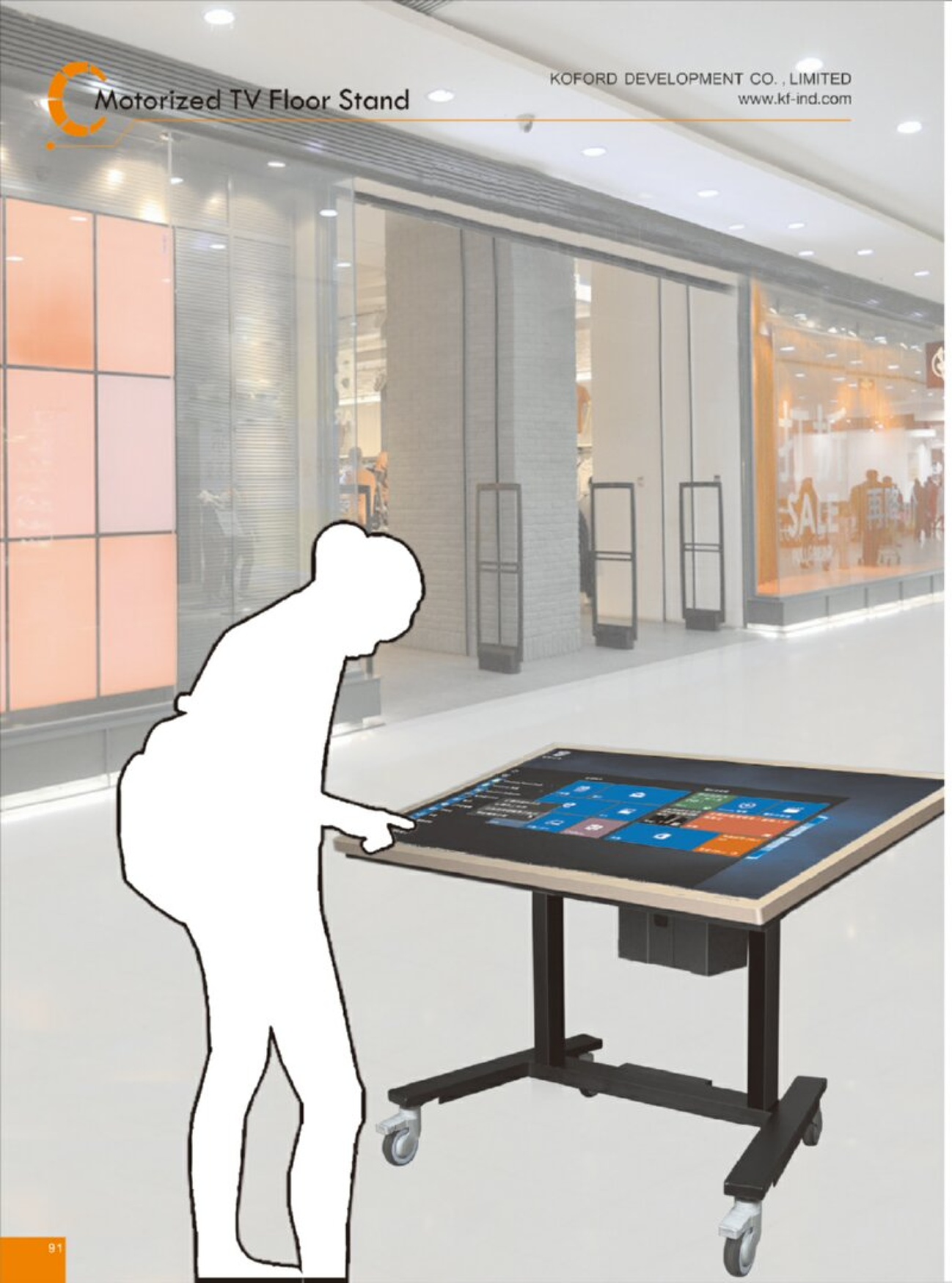

1

2

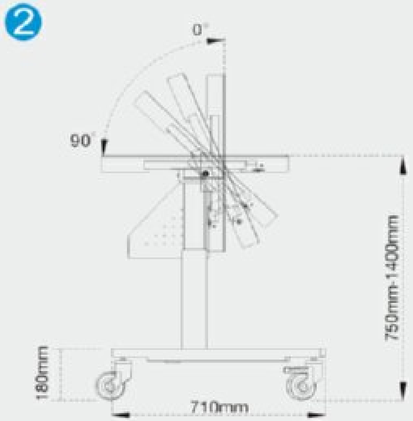

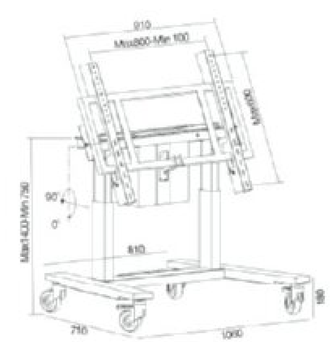

MT 680

Product Details:

Flip fixed position

Castors

4 outlet power rail mount on base

Model	MT 680
Material	SPCC
Suggest Size	42-75"
Loading Capacity	100kgs
Tilt	0-45-90 degree
Height	670mm-1320mm
Lift Distance	650mm
Lift Speed	Lifting 28mm per second, Rotation 11mm per second
Input Power	220-240V
Output	29V
Frequency	50Hz
Remote Control Distance	15m
VESA Standard	Max 800*500mm

Video Wall Stand

KOFORD DEVELOPMENT CO., LIMITED
www.kf-ind.com

Video Wall Stand

ISPACE
Better Choice of View

2X2

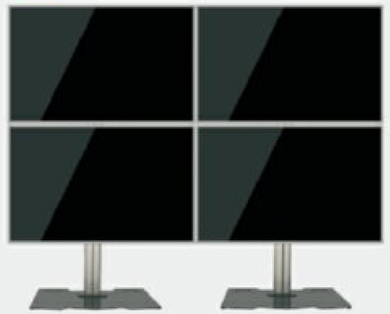

3X2

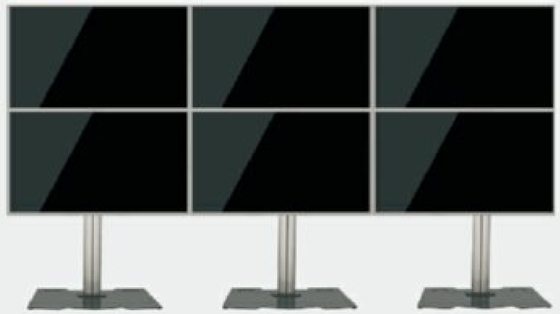

2X3

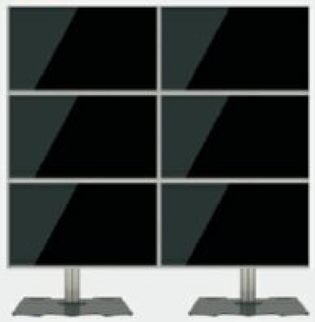

3X3

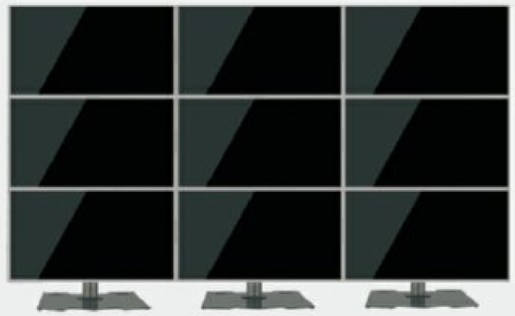

AW 001

AW 001A

Multiple Screens Solution

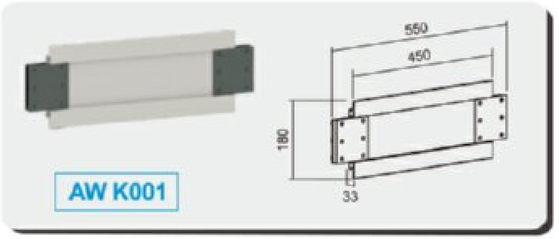

AW K001

Product Details:

Depth Adjustment 15mm
Height Adjustment 15mm

Locking System

Cable Management

Model	AW 001	AW 001A
Suggest Size	30-55"	30-55"
Material	Alu./Metal	Alu./Metal
VESA Standard	Max 800*400	Max 800*400
Loading Capacity	40kgs Per Mount	40kgs Per Mount
Orientation	Landscape	Landscape
Cable Management	Yes	Yes

AW 002

AW 002A

Product Details:

Depth Adjustment 15mm
Height Adjustment 15mm

Locking System

Cable Management

Model	Suggest Size	Material	VESA Standard	Loading Capacity	Orientation	Cable Management	Power Rail
AW 002	30-55"	Alu./Metal	Max 800*400	40 kgs Per Mount	Landscape	Yes	No
AW 002A	30-55"	Alu./Metal	Max 800*400	40 kgs Per Mount	Landscape	Yes	No

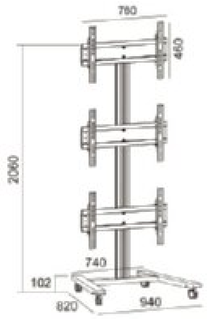

AW 2X2

AW 2X2A

Product Details:

Depth Adjustment 15mm
Height Adjustment 15mm

Locking System

Cable Management

Model	Suggest Size	Material	VESA Standard	Loading Capacity	Orientation	Cable Management	Power Rail
AW 2X2	30-55"	Alu./Metal	Max 800*400	40 kgs Per Mount	Landscape	Yes	No
AW 2X2A	30-55"	Alu./Metal	Max 800*400	40 kgs Per Mount	Landscape	Yes	No

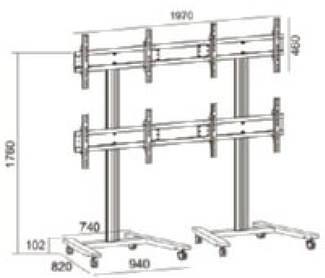

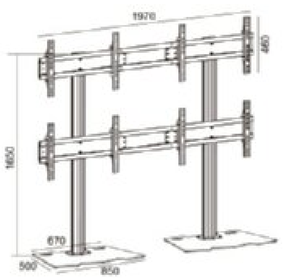

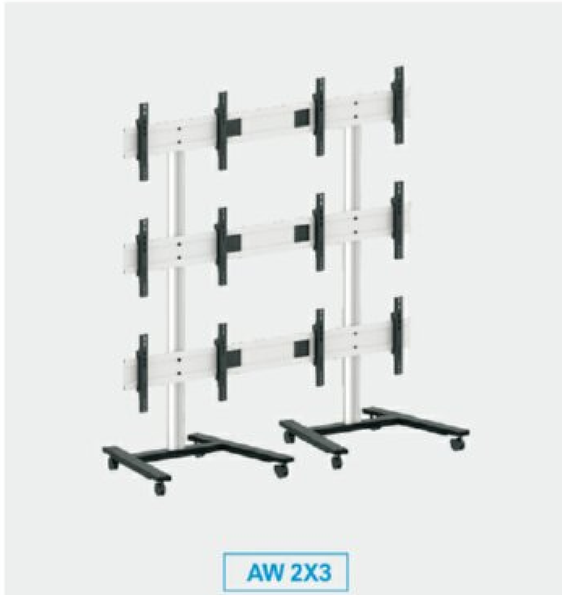

AW 2X3

AW 2X3A

Product Details:

Depth Adjustment 15mm
Height Adjustment 15mm

Locking System

Cable Management

Model	Suggest Size	Material	VESA Standard	Loading Capacity	Orientation	Cable Management	Power Rail
AW 2X3	30-55"	Alu./Metal	Max 800*400	40 kgs Per Mount	Landscape	Yes	No
AW 2X3A	30-55"	Alu./Metal	Max 800*400	40 kgs Per Mount	Landscape	Yes	No

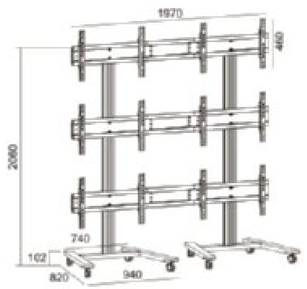

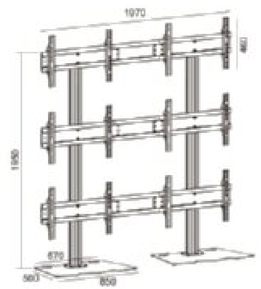

AW 3X2

AW 3X2A

Product Details:

Depth Adjustment 15mm
Height Adjustment 15mm

Locking System

Cable Management

Model	Suggest Size	Material	VESA Standard	Loading Capacity	Orientation	Cable Management	Power Rail
AW 3X2	30-55"	Alu./Metal	Max 800*400	40 kgs Per Mount	Landscape	Yes	No
AW 3X2A	30-55"	Alu./Metal	Max 800*400	40 kgs Per Mount	Landscape	Yes	No

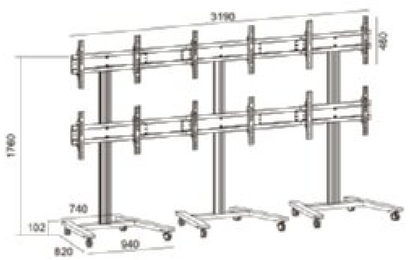

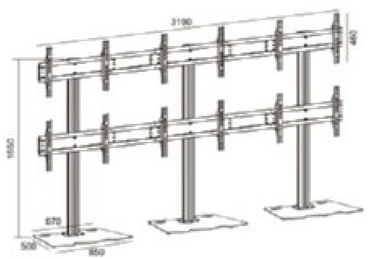

AW 3X3

AW 3X3A

Product Details:

Depth Adjustment 15mm
Height Adjustment 15mm

Locking System

Cable Management

Model	Suggest Size	Material	VESA Standard	Loading Capacity	Orientation	Cable Management	Power Rail
AW 3X3	30-55"	Alu./Metal	Max 800*400	40 kgs Per Mount	Landscape	Yes	No
AW 3X3A	30-55"	Alu./Metal	Max 800*400	40 kgs Per Mount	Landscape	Yes	No

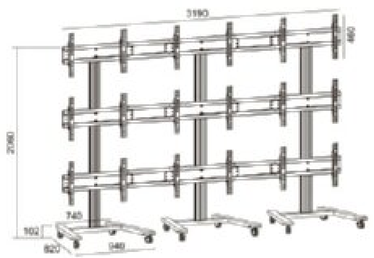

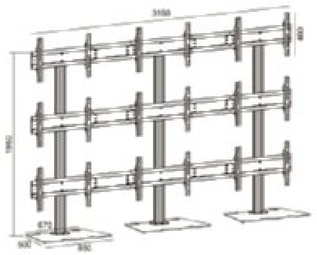

We can purchase all kinds of different TV stands With different Base optionally according to the acual requirement

Castors

Floorbase

Video Wall Stand

iSPACE
Better Choice of View

Video Wall Stand Landscape 3-Screens Wheelbase

AW 300

Video Wall Stand Landscape 3-Screens Floorbase

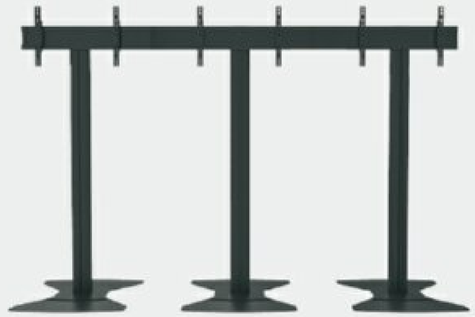

AW 300A

Product Details:

Depth Adjustment 15mm
Height Adjustment 15mm

Locking System

Power Rail

Cable Management

Model	Color	Suggest Size	Material	VESA Standard	Loading Capacity	Orientation	Cable Management
AW 300	Black or Silver	30-55"	Alu./Metal	Max 800*400	40 kgs Per Mount	Landscape	Yes
AW 300A	Black or Silver	30-55"	Alu./Metal	Max 800*400	40 kgs Per Mount	Landscape	Yes

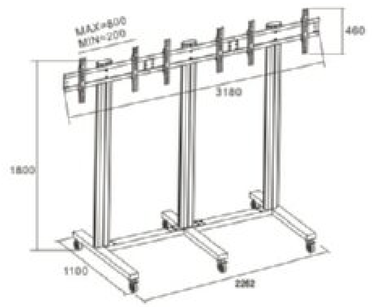

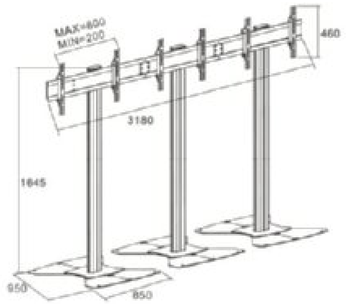

Video Wall Stand Portrait 3-Screens Wheelbase

AWP 300

Video Wall Stand Portrai 3-Screens Floorbase

AWP 300A

Product Details:

Depth Adjustment 15mm
Height Adjustment 15mm

Locking System

Power Rail

Cable Management

Vertical VESA 800 Adapter

Model	Color	Suggest Size	Material	VESA Standard	Loading Capacity	Orientation	Cable Management
AWP 300	Black or Silver	30-55"	Alu./Metal	Max 400*800	40 kgs Per Mount	Portrait	Yes
AWP 300A	Black or Silver	30-55"	Alu./Metal	Max 400*800	40 kgs Per Mount	Portrait	Yes

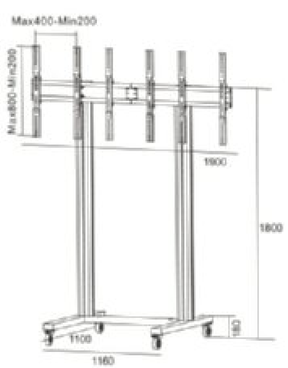

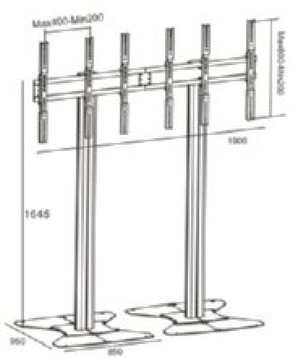

Video Wall Stand Landscape 4-Screens Wheelbase

AW 400

Video Wall Stand Landscape 4-Screens Floorbase

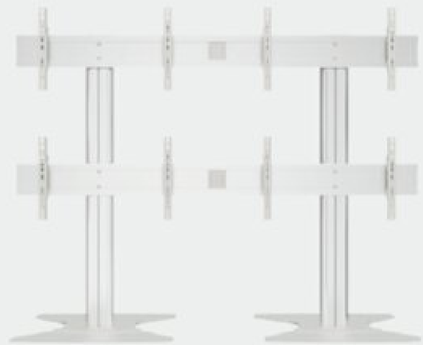

AW 400A

Product Details:

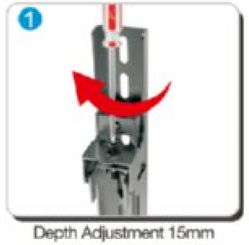

Depth Adjustment 15mm
Height Adjustment 15mm

Locking System

Power Rail

Cable Management

Model	Color	Suggest Size	Material	VESA Standard	Loading Capacity	Orientation	Cable Management
AW 400	Black or Silver	30-55"	Alu./Metal	Max 800*400	40 kgs Per Mount	Landscape	Yes
AW 400A	Black or Silver	30-55"	Alu./Metal	Max 800*400	40 kgs Per Mount	Landscape	Yes

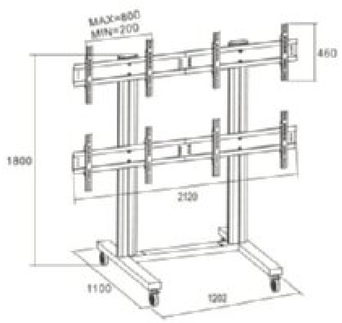

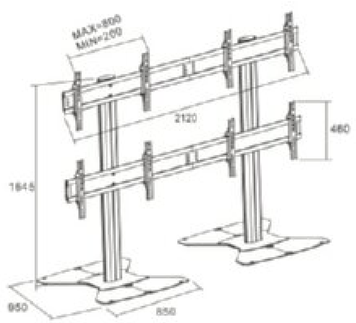

Video Wall Stand Portrait 4-Screens Wheelbase

AWP 400

Video Wall Stand Portrait 4-Screens Floorbase

AWP 400A

Product Details:

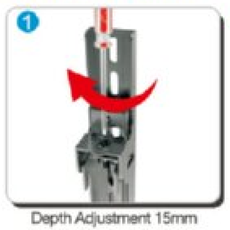

Depth Adjustment 15mm
Height Adjustment 15mm

Locking System

Power Rail

Cable Management

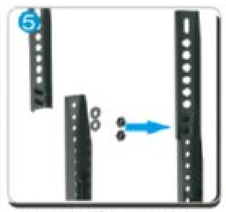

Vertical VESA 800 Adapter

Model	Color	Suggest Size	Material	VESA Standard	Loading Capacity	Orientation	Cable Management
AWP 400	Black or Silver	30-55"	Alu./Metal	Max 400*800	40 kgs Per Mount	Portrait	Yes
AWP 400A	Black or Silver	30-55"	Alu./Metal	Max 400*800	40 kgs Per Mount	Portrait	Yes

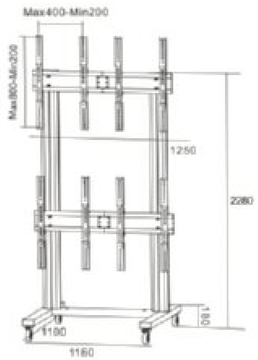

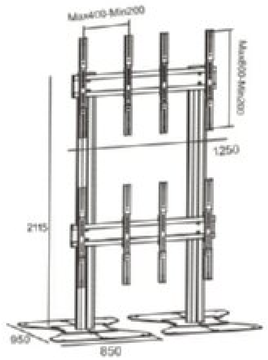

Video Wall Stand Landscape 6-Screens Wheelbase

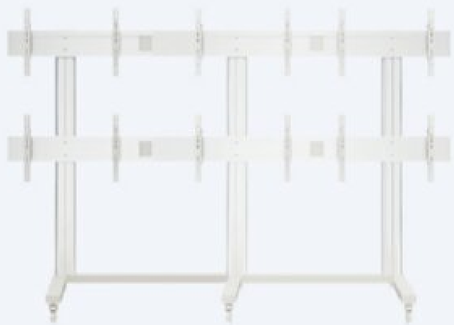

AW 600

Video Wall Stand Landscape 6-Screens Floorbase

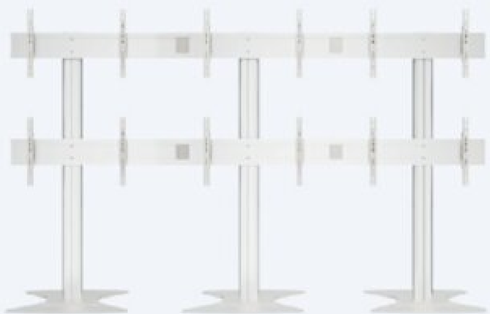

AW 600A

Product Details:

Depth Adjustment 15mm
Height Adjustment 15mm

Locking System

Power Rail

Cable Management

Model	Color	Suggest Size	Material	VESA Standard	Loading Capacity	Orientation	Cable Management
AW 600	Black or Silver	30-55"	Alu./Metal	Max 800*400	40 kgs Per Mount	Landscape	Yes
AW 600A	Black or Silver	30-55"	Alu./Metal	Max 800*400	40 kgs Per Mount	Landscape	Yes

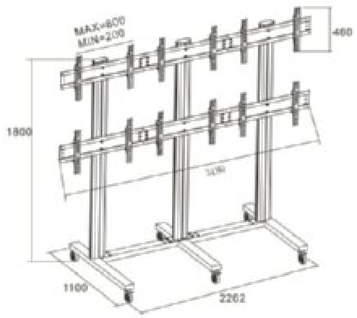

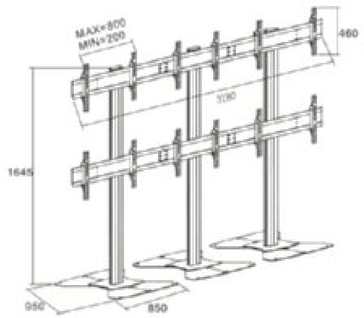

Video Wall Stand Portrait 6-Screens Wheelbase

AWP 600

Video Wall Stand Portrait 6-Screens Floorbase

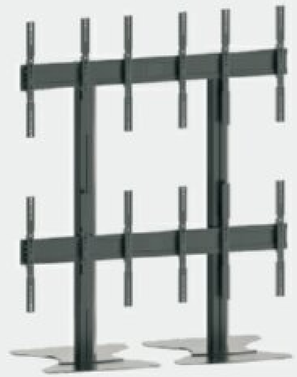

AWP 600A

Product Details:

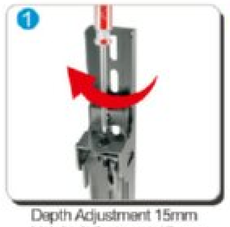

Depth Adjustment 15mm
Height Adjustment 15mm

Locking System

Power Rail

Cable Management

Vertical VESA 800 Adapter

Model	Color	Suggest Size	Material	VESA Standard	Loading Capacity	Orientation	Cable Management
AWP 600	Black or Silver	30-55"	Alu./Metal	Max 800*400	40 kgs Per Mount	Portrait	Yes
AWP 600A	Black or Silver	30-55"	Alu./Metal	Max 800*400	40 kgs Per Mount	Portrait	Yes

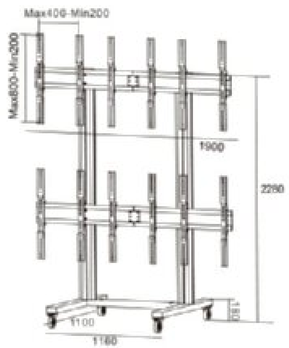

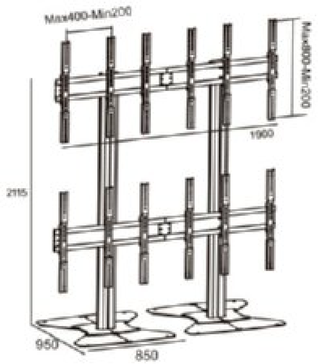

Video Wall Stand Landscape
8-Screens Wheelbase

AW 800

Video Wall Stand Landscape
8-Screens Floorbase

AW 800A

Product Details:

Depth Adjustment 15mm
Height Adjustment 15mm

Locking System

Power Rail

Cable Management

Model	Color	Suggest Size	Material	VESA Standard	Loading Capacity	Orientation	Cable Management
AW 600	Black or Silver	30-55"	Alu./Metal	Max 800*400	40 kgs Per Mount	Landscape	Yes
AW 600A	Black or Silver	30-55"	Alu./Metal	Max 800*400	40 kgs Per Mount	Landscape	Yes

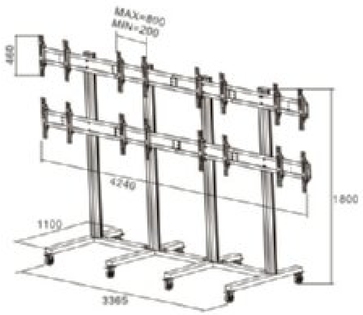

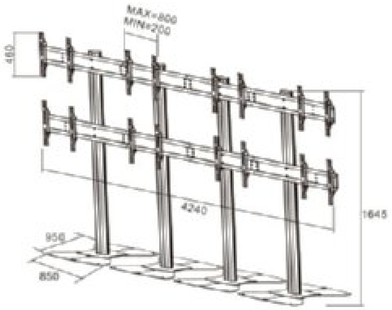

Video Wall Stand Landscape
9-Screens Wheelbase

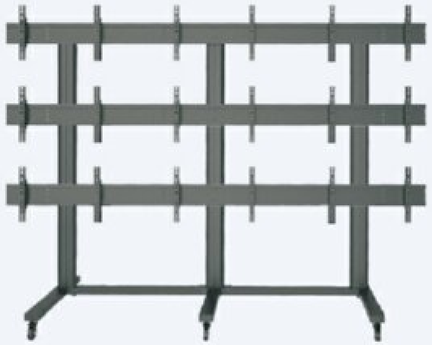

AW 900

Video Wall Stand Landscape
9-Screens Floorbase

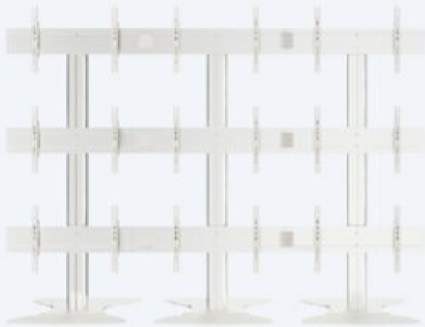

AW 900A

Product Details:

Depth Adjustment 15mm
Height Adjustment 15mm

Locking System

Power Rail

Cable Management

Model	Color	Suggest Size	Material	VESA Standard	Loading Capacity	Orientation	Cable Management
AW 900	Black or Silver	30-55"	Alu./Metal	Max 800*400	40 kgs Per Mount	Landscape	Yes
AW 900A	Black or Silver	30-55"	Alu./Metal	Max 800*400	40 kgs Per Mount	Landscape	Yes

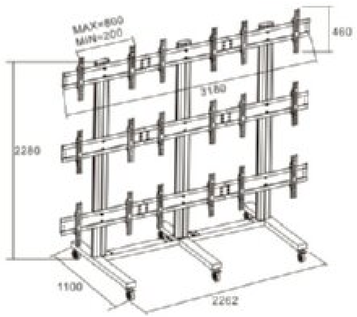

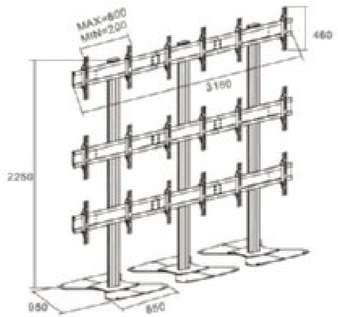

Video Wall Stand Portrait 6-Screens Wheelbase

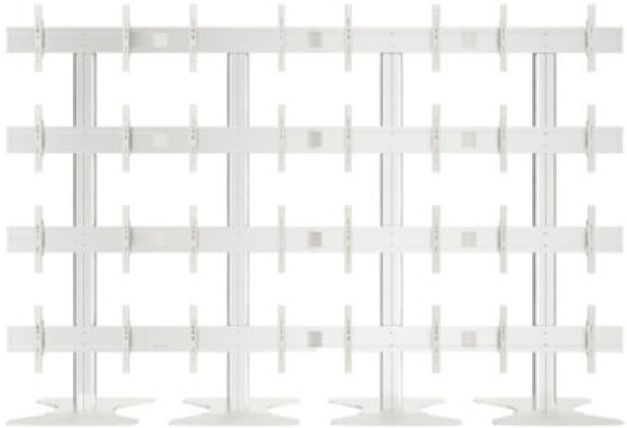

AW 1600A

Product Details:

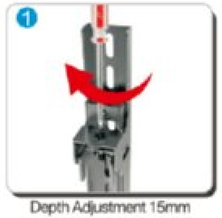

Depth Adjustment 15mm
Height Adjustment 15mm

Locking System

Power Rail

Cable Management

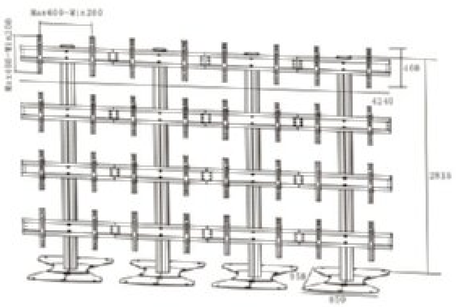

Model	Color	Suggest Size	Material	VESA Standard	Loading Capacity	Orientation	Cable Management
AW 1600A	Black or Silver	30-55"	Alu./Metal	Max 800*400	40 kgs Per Mount	Portrait	Yes

Projector Mount

• PM 001

Wall or Ceiling Mount for Projector
Arm Length Adjustable:65-430mm

TV Bracket

• TVM 109

Universal for Public Stand Series
Color:Black or Sivler
Material:SPCC
Orientation:Landscape/Portrait
Quick release & Lock optional

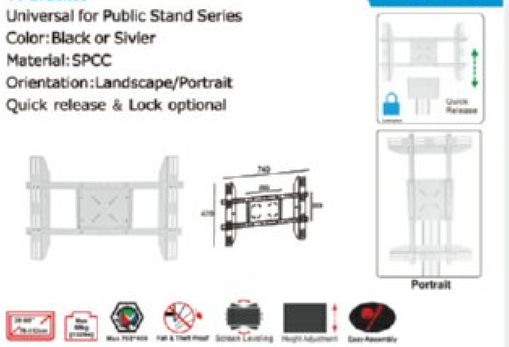

TV Bracket

• TVM 106

Universal for Public Stand Series
Color:Black or Sivler
Material:SPCC
Orientation:Landscape/Portrait

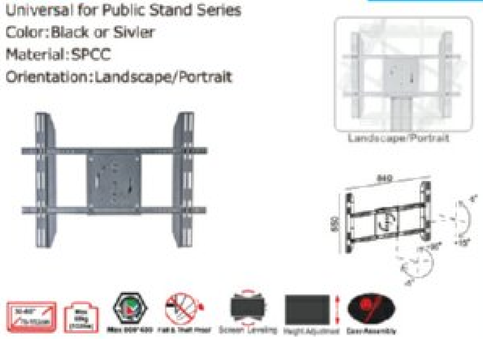

TV Brakcet

• TVM 202

Universal for Public Stand Series
Material:SPCC
Color:Black or Silver
Orientation:Landscape

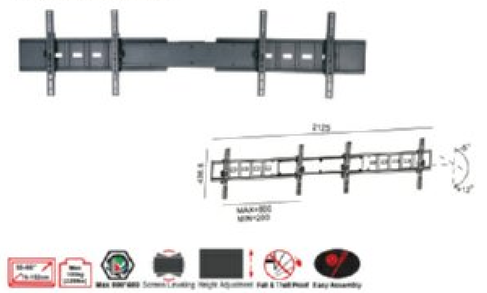

TV Brakcet

• TVM 106B

Universal for Public Stand Series
Material:SPCC/Alu
Color:Black or Silver
Orientation:Landscape

Keyboard Tray

KB 001

Color:Black /Silver/White
Material:MDF/SPCC
Height Adjustable
Width Adjustable
Universal for KF Carts

Codec or Printer Shelf

• PRT 002

Universal for KF Products
Material: MDF/SPCC
Color:Black or Silver
With Adjustable

Codec or Printer Shelf

• PRT 001

Universal for KF Products
Material:SPCC
Color:Black or Silver
With Adjustable

CPU Holder

• CPU 001

Universal for KF Products
Material:SPCC
Color:Black or Silver
With adjustable

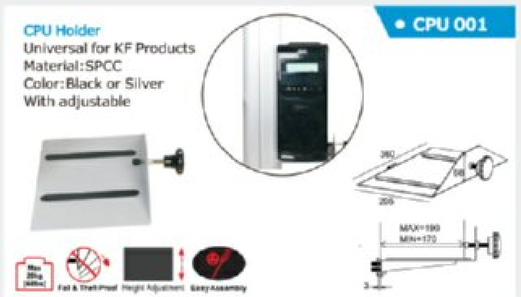

A4 Document Shelf

• DOC 001M

Universal for KF Products
Material:SPCC
Color:Black or Silver

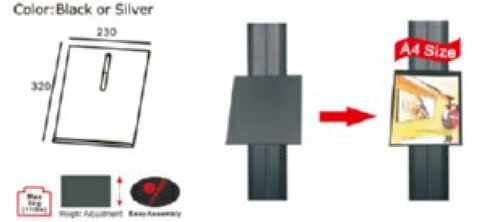

A3 Document Shelf

• DOC 001L

Universal for KF Products
Material:SPCC
Color:Black or Silver

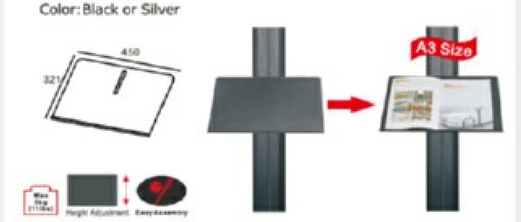

• CMR 001

Camera Holder
Universal for KF Products
Color:Black or Silver
Material:SPCC
Cable Management

• CMR 002

Camera Holder Heavy Duty
Universal for KF Products
Color:Black or Silver
Material:SPCC
Cable Management

• DVD 001

DVD Frontshelf
Universal for KF Products
Material:SPCC
Color:Black or Silver
Cable Management

• CMR 003

Camera Holder Heavy Duty
Universal for KF Products
Material:SPCC
Color:Black or Sivler
Cable Management

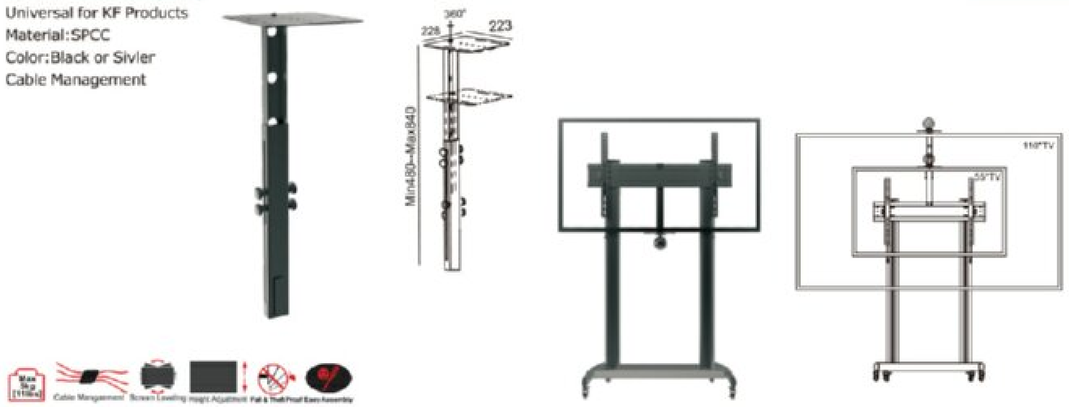

• HK 001

Cable Hooks
Universal for KF Products
Material:SPCC
Color:Black or Silver

• STR 001

Storage Box
Universal for KF Products
Material:SPCC
Color:Black or Silver

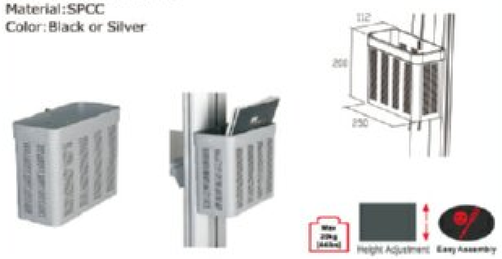

• MB 001

Media Box
Universal for KF Products
Material:SPCC/Plexi glass
Color:Black or Silver
Cable Management
Plexiglass door for remote working
Door with lock

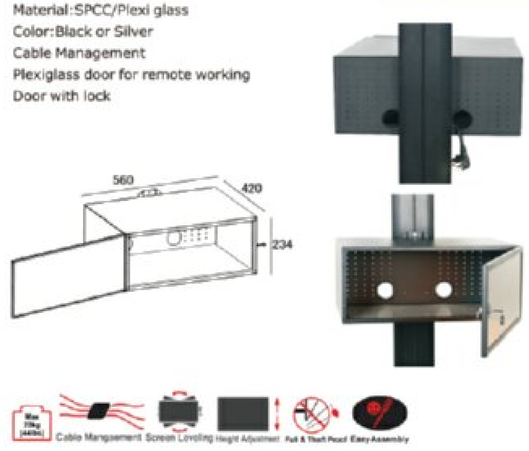

• MBS 001

PC Mediabox / Digital Signage Box
Universal for KF Products
Material:SPCC
Color:Black or Silver
Cable Management
Wallmounted adapters included
Door with lock

• BS 100

Floor Base
Universal for KF Products
Material:Steel 5mm thickness
Color:Black or Silver

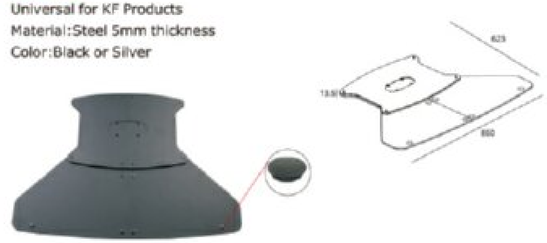

• BS 200

Floor Base
Universal for KF Products
Material:Steel 5mm thickness
Color:Black or Silver

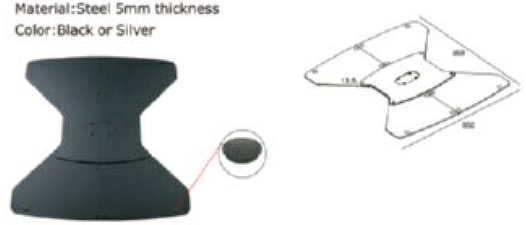

• ADF 001

Adjustable Feet
Universal for KF Carts
Material:Rubber or Metal

• E 001

E Floormount Base
Color:Black/Silver/White

• CMA 001

Ceiling Adapter
Universal for Menuboard Video Wallmount Series

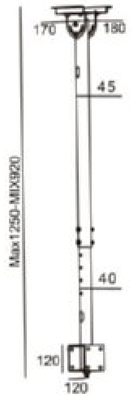

• HDL 001

Handling Bar
Universal for KF Carts
Material:Alu.Casting

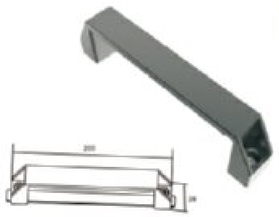

• HDL 002

Handling Bar
Universal for KF Carts
Material:SPCC

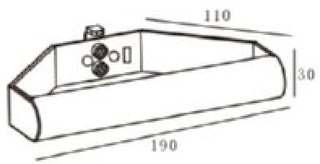

• FC 001

Flight Case
Universal for KF Products
Material:Alu/Wood/Foam
W/Pull For Divided pillar

• FC 002

Flight Case
Universal for KF Products
Material:Alu/Wood/Foam
W/O Pull For Long Pillar